CIBSE JOURNAL

#Build2Perform

August 2017 www.cibsejournal.com

ENGINEERING SUCCESS

BDP's Andrew Swain-Smith on the growing stature of building services

ELEMENTA'S REPEAT PERFORMANCE

SOFT LANDINGS IN PRACTICE

OVERHEATING AND TM59

Editorial
Editor: Alex Smith
Tel: 01223 378034
Email: asmith@cibsejournal.com
Deputy editor: Liza Young
Tel: 01223 378048
Email: lyoung@cibsejournal.com
Technical editor: Tim Dwyer
Designer: James Baldwin

CIBSE Journal is written and produced by CPL (Cambridge Publishers Ltd) Tel: +44 (0)1223 378000. **www.cpl.co.uk** 1 Cambridge Technopark, Newmarket Road, Cambridge CB5 8PE.

Editorial copy deadline: First day of the month preceding the publication month

Advertisement sales
Sales manager: Jim Folley
Tel: 020 7324 2786
jim.folley@redactive.co.uk
Senior sales executive: Paul Wade
Tel: 020 7880 6212
paul.wade@redactive.co.uk
Advertising production: Jane Easterman
Tel: 020 7880 6248

Commons sense

The Houses of Parliament last month announced two major contracts aimed at safeguarding the Palace of Westminster for future generations of parliamentarians – as well as the one million people who visit every year. Multidisciplinary consultant BDP won the contract for architectural and building design services. Its work will help lay the groundwork for the longer-term strategy to protect the heritage of the building beyond 2020.

The complexity of the renewal of the Palace of Westminster requires a wide range of different disciplines, including security consultants, lighting specialists and building services engineers. On page 26, we speak to BDP's chair of building services engineering to find out how design teams collaborate to ensure every technical viewpoint is taken into account when considering solutions.

Andrew Swain-Smith's philosophy is to continually question whether the design meets the needs of the end user – an approach he describes as common-sense engineering. Focusing on operational outcomes is the ethos of Soft Landings (page 20). We speak to an architect, contractor and building services engineer to find out how they use Soft Landings to ensure their buildings perform as the client intended.

James Warne, co-founder of building services consultant Boom Collective, highlights the importance of designers understanding the impact that their specifications have on other design packages. Poor interfaces between these details are often at the root of building failure, says Warne.

It is heartening to see a client, Hampshire County Council, embrace Soft Landings. The local authority is using the initiative on a new school building and refurbishment programme worth more than £200m. Soft Landings should ensure the full value of its investment is realised.

This month we summarise a chapter from the upcoming CIBSE Guide E: *Fire Safety Engineering*, due to be published in the autumn. While we do not know what caused the Grenfell Tower fire, it is important that we continue to publish best-practice guidance from industry experts when we can.

Finally, the six nominations for the RIBA Stirling Prize were announced last month. Among the nominees were two buildings previously featured as case studies in *CIBSE Journal* – a visitor centre at Chatham's Historic Dockyard and the British Museum's World Conservation and Exhibitions Centre. You can read about the building services engineering contribution at **www.cibsejournal.com.**

ALEX SMITH, EDITOR asmith@cibsejournal.com

CONTRIBUTORS

Hywel Davies
CIBSE's technical director looks at what Brexit and the Repeal Bill means for the environment

Mike Chater
Hampshire County Council's senior architect on his positive experience of Soft Landings

Liza Young
Our deputy editor looks at the issue around overheating and CIBSE's essential new TM59 guide

Tim Dwyer
Our technical editor looks at mini heat pumps with a ground source loop in social housing

CONTENTS

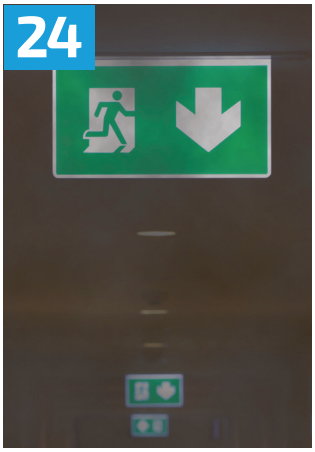

CIBSE JOURNAL

www.cibsejournal.com

The official magazine of the Chartered Institution of Building Services Engineers

SOCIAL MEDIA

@CIBSEJournal

CIBSE LinkedIn

CIBSE Journal newsletter

www.cibse.org

FOR CIBSE

Journal production manager: Nicola Hurley
Tel: 020 8772 3697, **nhurley@cibse.org**

CIBSE, 222 Balham High Road,
London SW12 9BS
Tel: +44(0)20 8675 5211

 ISSN 1759-846X

SUBSCRIPTION ENQUIRIES

If you are not a CIBSE member but would like to receive *CIBSE Journal*, subscribe now! Costs are £80 (UK) and £100 (international). For subscription enquiries, and any change of address information, please contact Nicola Hurley at **nhurley@cibse.org** or telephone **+44 (0) 20 8772 3697**. Individual copies are also available at a cost of £7 per copy, plus postage.

The 2017 US annual subscription price is £100. Airfreight and mailing in the US by Air Business, C/O Worldnet Shipping NY Inc, C/O Air Business Ltd / 155-11 146th Street, Jamaica, New York, NY11434. Periodical postage pending at Jamaica NY 11431. US Postmaster: Send address changes to *CIBSE Journal*, C/O Air Business Ltd / 155-11 146th Street, Jamaica, New York, NY11434.

CREDITS

Cover image and PP26-27 Simon Weir
P7 Getty Images / Carl Court P8 iStock.com / Oleg Albinsky / Andrea Fanelli P9 Bloomberg via Getty Images / Dario Pignatelli P9 iStock.com / Vicnt P10 iStock.com / IR_Stone P18 Getty Images /AFP / Adrian Dennis P24 iStock.com / WichienTep P28-31 Credit: Emily Hagopian P32 iStock.com / Prawat P47 iStock.com / Northlightimages

FSC www.fsc.org MIX Paper from responsible sources FSC® C017177

abc

ABC audited circulation:
19,030 January to December 2015
Printed by: Warners Midlands PLC

Perform » Reward » Celebrate

CIBSE BUILDING PERFORMANCE AWARDS 2018

"GET YOUR BEST WORK, MAKE SURE IT REALLY WORKS AS YOU THINK IT SHOULD, AND THEN SUBMIT. IT'S WORTH EVERYTHING"

Kevin Hydes, Chief Executive Officer of Integral Group
Winner of **CIBSE Building Performance Consultancy of the Year** ***(up to 100 employees)*** **2017**

ENTER NOW

Entry deadline:
Friday 15 September 2017

cibse.org/BPA

Government urged to scrap deregulation after Grenfell

Organisations demand better appreciation of good health and safety in wake of high-rise fire

Leading safety bodies have called for the government to reverse the ongoing deregulation of health and safety in the wake of the Grenfell Tower tragedy.

The Institution of Occupational Safety and Health, the British Safety Council and the Royal Society for the Prevention of Accidents have urged ministers to 'think again'. In an open letter to the Prime Minister, signed by more than 1,000 safety specialists, they described the fire as 'a turning point' that would prompt 'wider appreciation that good health and safety is an investment, not a cost'.

The letter led to a debate in the House of Lords, culminating in Lord Prior – from the Department for Business, Energy and Industrial Strategy – agreeing to convene a meeting between the safety industry and government. 'The awful tragedy of Grenfell Tower will make us rethink these issues and I hope it will change… the way we look at regulation,' he said.

Meanwhile, a report on the BBC's *Newsnight* programme suggested the Department for Communities and Local

At least 80 people died after fire ripped through Grenfell Tower

Government is planning a full review of the Building Regulations in the wake of the fire. It is understood officials will look at how building components achieve compliance with the regulations, possible ambiguity in supporting guidance, and whether testing regimes are sufficiently rigorous and consistent.

The Local Government Association had demanded just such a review, saying scrutiny of the regulations could not wait until after the public enquiry into the Grenfell fire. 'There is a complexity and confusion in the current system that must be addressed,' it said.

RIBA REVEALS STIRLING PRIZE SHORTLIST

See our case studies of the Command of the Oceans redevelopment and the British Museum World Conservation and Exhibitions Centre at wwww.cibsejournal.com

Six very different projects have been shortlisted for this year's RIBA Stirling Prize for the UK's best new building.

The list features: the Command of the Oceans redevelopment at the Historic Dockyard Chatham (Baynes and Mitchell Architects; M&E engineer: Skelly & Couch); The British Museum World Conservation and Exhibitions Centre (RSH + P; M&E engineer: Arup); Hastings Pier (dRMM Architects; M&E engineer: Ramboll UK); City of Glasgow College – City Campus (Reiach and Hall Architects and Michael Laird Architects; M&E engineer: FES with Hulley & Kirkwood); Barretts Grove housing scheme (Amin Taha + Groupwork; M&E engineers: Syntegra); and Photography Studio for Juergen Teller (6a architects; M&E engineer: Max Fordham).

The winner will be announced on 31 October at the Roundhouse in London.

New industry group to advise on building safety

An industry response group (IRG) has been set up to ensure the construction sector is ready to meet the building challenges that will emerge in the wake of the Grenfell Tower tragedy.

The group will include representatives from Build UK, the Construction Industry Council and the Construction Products Association, as well as from government. It will complement the work of the Independent Expert Advisory Panel, which was established in June to advise on immediate steps to ensure building safety.

'We understand how concerned people are about the safety of buildings and… the UK construction industry is working with urgency to respond to advice published by the government,' said the IRG.

'Bright spots' will keep sector busy into 2018

New project starts will rise by 1% this year and by another 2% in 2018, according to the latest figures from market analyst Glenigan.

Its mid-year forecast said the squeeze on household budgets would hold back private housing, retail and office work over the next 18 months, but 'bright spots' in civil engineering, logistics-led industrial work and the hotel and leisure markets would 'keep the industry busy'.

The value of new work in the health sector is set to rise by 23% this year and Glenigan expects spending on education projects to 'rebound sharply' after a sluggish 2017.

Housebuilding is patchy because of the squeeze on consumer spending; Glenigan is forecasting a 1% dip in the value of private housing starts this year and a further 4% fall next year. However, the build-to-rent market is performing strongly with new projects worth £750m last year and further growth expected.'

Systems inadequate for whole-building fires

Mechanical smoke extraction and ventilation systems – such as that installed as part of the 2016 refurbishment at Grenfell Tower – are not designed to clear smoke in a whole-building fire situation.

Mechanically ventilated smoke shafts are prevalent in the market because they save space and guarantee smoke-extraction rate. However, these systems are normally designed to a maximum 4MW design fire from a single flat, with sprinkler-protected systems operating on a lower design-fire size of, typically, 1MW – both of which are much lower than the assumed whole-building fire load experienced at Grenfell Tower.

According to an industry expert, designing for a whole-building fire requires significant spacial, power and capital costs for many aspects of the building. Among these are smoke ventilation, resilience of construction – including compartmentalisation – and water provision if sprinklers are installed.

Balfour Beatty agrees design partnership

Balfour Beatty is forming a strategic and exclusive design partnership with Atkins, Mott MacDonald and WSP, to improve collaboration and innovation.

The partnership will be led by Robin Bashford, newly appointed strategic design consultant partnership director. Designers and engineers from the four companies will work together to find solutions in areas such as health and safety through design, value engineering, and the use of cost-effective design resources.

UK clients will benefit from earlier engagement with a coordinated, collaborative team and improved, consistent working practices, which will help reduce construction and programme costs.

Stephen Tarr, managing director of Balfour Beatty's major projects business, said the partnership represented 'collaboration in its purest form, providing a new and refreshed way of working between contractor and designer'.

BDP to help keep Palace of Westminster safe beyond 2020

Two firms awarded contracts crucial to safeguarding parliament buildings

BDP and CH2M have been chosen to deliver £12m worth of projects at the Palace of Westminster. The work is described as crucial to protecting the building 'from the substantial and growing risk of failure of its essential services'.

BDP has been appointed to carry out architectural and building design services, while CH2M will supply programme, project and cost-management services. The work will also include a detailed exploration of the condition of the building, a security strategy, planning for a major programme of asbestos removal, and fire-safety improvements.

The Palace was built in the mid-1800s, and many of its features and systems have never undergone a major renovation. Its heating, ventilation, water, drainage and electrical systems are extremely antiquated. Urgent M&E repair work has been under way since 2009, but will only protect the Palace until 2020 and only address systems at highest risk of failure. A statement from the Houses of Parliament said: 'These contracts will ensure the Palace remains safe and habitable beyond 2020.'

The projects are not affected by the debate about parliament decanting to a new site to enable full-scale renovation and rebuilding work.

Read our interview with BDP's Andrew Swain-Smith on page 26.

Carbon emissions rise with height of a building

High-rise buildings use more energy per square metre than low-rise equivalents and emit twice as much carbon, according to University College London's (UCL's) Energy Institute.

Researchers found that electricity use is nearly two and a half times greater in office buildings of 20 or more storeys, compared with buildings of six storeys or fewer. Gas use is also 40% greater.

The High-Rise Buildings: Energy and Density project analysed energy consumption data from 610 UK office buildings; it found that – while air conditioning plays a significant part – it is not the sole reason for the discrepancy. 'On average, carbon emissions from air-conditioned offices are 60% higher than those from offices with natural or mechanical ventilation,' said Professor Philip Steadman, of the UCL Bartlett School of Energy, Environment and Resources. 'The increase with height is seen in buildings with and without air conditioning.'

Funded by the Engineering and Physical Sciences Research Council, the research also studied residential buildings in 12 London boroughs. The team concluded that the results were due to the physical and meteorological consequences of building higher.

'Taller buildings are more exposed to strong winds, as well as to more hours of direct sun,' said Steadman. 'Thus, energy use for heating and cooling would be increased. But these hypotheses have yet to be tested.'

Brexit Secretary David Davis

Fears over 'environment-shaped hole' in Repeal Bill

Green campaigners concerned about lack of provision for enforcement

The government has been accused of recklessness towards environmental legislation in its Repeal Bill, which signals the way in which EU regulations will be transposed into UK law after Brexit.

Green Party co-leader Caroline Lucas said the bill does not set out how environmental laws will be enforced.

'There's an enormous environment-shaped hole in the government's Brexit plans,' she said. 'The Repeal Bill may transfer EU laws onto the British statute book, but there's no provision here for ensuring that these laws are properly enforced by institutions in the UK.

'The government knows that this simple transfer isn't enough to ensure that our environment is protected – and their refusal to legislate for specific environmental protections and enforcement is reckless.'

The bill contains so-called Henry VIII clauses, which allow the government to repeal legislation without parliamentary approval during the two years after the UK leaves the EU.

With 80% of the UK's green regulations based on EU law, green campaigners are concerned about a 'governance gap'.

'The bill is very disappointing in many respects,' said Shaun Spiers, of the Green Alliance, a group of campaigners. 'It falls well short of our expectations and I really hope the government will think again and amend it.'

The Alliance is concerned about a lack of clarity around the legal framework for environmental laws, which are currently overseen by the European Commission and the European Court of Justice.

However, Environment Secretary Michael Gove said exit from the EU was an opportunity to redevelop agricultural and fishing policies in a way that would 'put the environment first'.

Read Hywel Davies on the Repeal Bill on page 16.

Calls for new regulations to tackle overheating

The government has been urged to revise the Building Regulations to reduce the amount of overheating in buildings.

Rising global temperatures mean deaths caused by overheating will increase to more than 7,000 a year by 2040, according to the Committee on Climate Change (CCC). In its annual report on the UK's progress on tackling climate change, the CCC repeated its plea for a change to the regulations, which was rejected by the government in 2015 on the grounds that it would impose too heavy a cost burden on housebuilders.

Lord Deben, chair of the CCC and a former Conservative environment secretary, said the regulations should not be seen as a problem, but as a way to help the industry deliver better-quality buildings. He added that tougher Building Regulations were essential to support the UK's strategy for adapting to climate change, but that dealing with overheating did not necessarily mean increasing the amount of air conditioning. 'If buildings are properly built in this country there is very little need for air conditioning. The problem with air conditioning is that it heats the area round about,' he said.

Read about CIBSE's new overheating guidance on page 32.

IN BRIEF

Ventilation and AC market to rebound

The UK ventilation and air conditioning market has grown steadily since 2013 and is now estimated to be worth £1.17bn, according to a new report from AMA Research.

The market was 'more subdued' this year, it said, but forecast annual growth rates of around 3% from 2019 and that, by 2021, the market would be 10-11% larger.

AMA noted positive influences on the market, including: increasing health, safety and energy efficiency legislation; revised Building Regulations and environmental legislation; and 'increasing awareness about the importance of indoor air quality and energy use'. A full copy of the report can be ordered at **www.amaresearch.co.uk**

Sainsbury's to go 100% LED

Sainsbury's is to switch to 100% LED lighting by 2020. It will install more than 250,000 LED lights in 450 stores, in a move that is expected to cut annual energy consumption by 58% and greenhouse gas emissions by 3.4%. The supermarket claims this will put it on track to meet its goal of cutting total carbon emissions by 30% by 2020.

'We have almost halved the carbon emissions of our stores since 2005 and, in the past 12 months, reduced our electricity use by 11.6%, despite growing our operation by 54.2%,' said head of sustainability Paul Crewe.

ISO launches carbon emissions standard

The International Organization for Standardization (ISO) has launched the first standard for calculating, reporting, communicating and verifying carbon emissions from existing buildings.

Previously, there was no globally agreed method to measure, report and verify potential reductions of emissions from existing buildings in a consistent and comparable way.

It now hopes that the ISO 16745 standard will provide 'the foundation for accurate performance baselines of buildings to be drawn, national targets to be set, and carbon trading to occur on a level playing field'.

Partnership improves energy efficiency of its estate by 25%

Property owners cut energy consumption by 145GWh over six years

A group of 28 UK property owners has reported achieving energy savings of £16m since 2011 by tackling the operational performance of its buildings.

The Better Buildings Partnership – which includes Land Securities, Canary Wharf Group and the Crown Estate – says the energy efficiency of its 7 million m^2 of built environment has improved by 25%. It used the Real Estate Environmental Benchmark (REEB) to gather and compare energy data, calculating that it had cut consumption by 145GWh since 2011, while growing its total estate by 71%.

'It can be challenging to achieve continuous improvements across whole portfolios,' said the partnership's programme director, Sarah Ratcliffe. 'For those assets retained over longer periods, members have already captured the "low-hanging fruit" on poorly performing assets. This makes this progress all the more impressive and demonstrates real leadership and dedication.'

However, Hammerson's head of sustainability, Louise Ellison, said the data showed just how much more work the property sector had to do to move 'from being part of the climate-change problem to being part of the solution'.

'SIDEWAYS' LIFT TAKES OFF

A test tower for an elevator that goes sideways as well as up has been unveiled in Germany. The Multi system is described as the world's first horizontal-vertical lift and is now operating in a facility in Rottweil. Manufacturer ThyssenKrupp claims it will be a 'gamechanger' for the way large buildings are designed and used.

The elevator consists of multiple cabins – as opposed to the conventional one – operating in a loop without ropes. According to ThyssenKrupp, this design increases the usable space in a building by 25%, as it requires fewer and smaller shafts.

Developer OVG Real Estate is planning to be the system's first commercial customer by installing the Multi in a new tower building in Berlin.

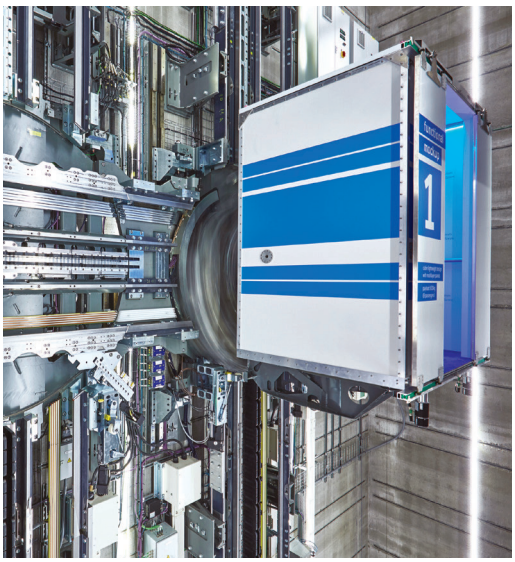

Call to 'rethink' London energy policy

Elementa Consulting has launched an initiative aimed at turning London into a 'zero emissions' city. 'Getting to Zero' outlines policy recommendations and summarises ideas generated from a pan-industry workshop that involved members of the CIBSE Young Engineers' Network.

The report is the manifesto for newly formed taskforce London Energy Transformation Initiative (LETI), which consists of four working groups that will translate ideas from the workshop into 'evidence-based recommendations' for the London Plan and the London Environment Strategy.

'Greenhouse gas emissions from London's buildings need to be rapidly reduced to meet our climate change targets,' said a statement from LETI. 'This will require a dramatic shift in the way we design, construct, refurbish and operate our buildings. London's climate-change policy for buildings was once seen as world leading, but – after more than a decade of refinement – requires a rethink.'

Movers and makers

Bjarne Olesen was unveiled as the new president of ASHRAE at the society's annual general meeting in Long Beach, California.

Olesen is professor at the Technical University of Denmark and his presidential theme will be 'Extending Our Community'.

'The dedication of our 2017-2018 officers will strengthen our Society's knowledge base, community reach and ability to shape a more sustainable world,' said Olesen during his inaugural speech. 'I look forward to working with my fellow ASHRAE officers and members this year, to extend our global community, adapt to new technologies and embrace our shared needs and objectives.'

Jason Knights has been appointed new managing director at SES Engineering Services (SES) after the departure of Andy Wall.

Knights joined the Wates Group in 2010 and moves across to SES from the group's M&E business, Wates Building Services.

He will now drive SES's growth strategy and oversee the continued development of the SES Prism offsite manufacturing business.

Construction Group managing director, Paul Chandler said: 'I am pleased that we have been able to appoint an internal successor of Jason's calibre to this critical role.'

Steve Wood has been appointed new chief executive of the home warranty provider NHBC.

He has more than 30 years' experience in the insurance industry and was formerly CEO of Paymentshield, a subsidiary of Towergate Insurance. Before that, he was managing director of the Ecclesiastical Insurance Group.

'I am very pleased to be joining NHBC at a time when housing is such a critical issue for the UK,' said Wood.

NOT ALL COWBOYS RIDE HORSES

It is illegal for any unregistered electrician to do most work in your home.

Only Safe Electric Registered Electrical Contractors can give you a completion certificate that says their work meets all the latest standards.

Find one nearby at safeelectric.ie

SAFE ELECTRIC
Registered Electrical Contractor

IN BRIEF

Gender bias in AEC industry

The CIBSE Upper Canada and ASHRAE Toronto chapters held a joint evening event on 15 May, titled 'Gender bias in the AEC industry', and attended by members of both chapters.

Fiona Cousins FCIBSE, from Arup in New York, and Julia Keen FASHRAE, from Kansas State University, presented the challenges faced by women in the architecture, engineering and construction industry, both in the UK and North America.

This included discussions about retention in the building engineering and construction industry, common barriers for women employees, and tactics and strategies for women to succeed in construction.

The thought-provoking session had a clear message that employers and the industry need to continue to improve to be able to attract and retain a diverse and talented workforce.

Call for abstracts for 2018 symposium

CIBSE is seeking papers, reviews and case studies on research and development relating to any human-controlled environment, including buildings, occupied spaces and vehicles – terrestrial or otherwise – for the 2018 CIBSE ASHRAE Technical Symposium.

Current global uncertainties about climate, resources, the environment and security mean there is an increasing need for those with a responsibility to deliver healthy and productive environments to reach beyond 'business as usual'. The symposium aims to provide the industry with a technical insight into the methods, technologies and techniques available or just over the horizon that will drive the development of sustainable future environments.

Submissions are encouraged from young and experienced industry practitioners, researchers and building users. The event will take place from 12-13 April 2018 at London South Bank University.

For a full description of proposed topics and to submit your abstract, visit **www.cibse.org/symposium** The deadline for abstracts is 11 September 2017.

New inclusivity panel appoints chair

Atif Rashid aims to help create level playing field for people of all backgrounds

The CIBSE board has appointed Atif Rashid as chair of the Institution's inclusivity panel.

The panel aims to advise and engage with the board on:

- All matters relating to diversity, equality and inclusion, with a view to improving organisational awareness and performance in these areas among both staff and the global membership
- CIBSE's obligations under the Diversity in Engineering Concordat by engaging with frameworks proposed by the Royal Academy of Engineering's Diversity and Inclusion team and, where beneficial, other professional institutions
- The prioritisation of inclusivity issues that have particular relevance to CIBSE at any time, together with plans for addressing these issues.


Atif Rashid

Atif has recently gained his MCIBSE status as a chartered engineer and said his appointment was 'an excellent opportunity to get in on the "ground floor" and to help shape a truly exemplary panel that is both of great value to the Institution and, hopefully, an exemplar to the rest of the industry.'

A Scottish-born Muslim of Pakistani heritage, Atif described himself as 'deeply passionate about giving people – whatever their background – a level playing field in which they can excel by performing their best work.'

He added: 'This passion is rooted in my belief that I have benefitted from individuals, institutions and companies that have demonstrated this same value in their treatment of me.'

The first meeting of the panel will be held in the summer and will focus on establishing the initial objectives for the panel in line with their terms of reference.

Tributes paid to ILEVE stalwart who sought safer workplaces

The July issue of the *Journal* reported the untimely death of James Wheeler, technical coordinator for the Institute of Local Exhaust Ventilation Engineers (ILEVE).

Initially trained as a medical laboratory chemist, James joined the Health and Safety Executive (HSE) nearly 30 years ago. Initially working in the biochemical laboratory, he moved into exposure control work, becoming a fully qualified principal inspector. In this role, James was responsible for controlling risks to people's health and safety from using hazardous substances. He gave technical support and advice on occupational hygiene aspects of LEV engineering controls and nanotechnology to HSE Policy Units, other government departments and external industry stakeholders, trade bodies and the wider public.

James was HSE's core technical expert on substances hazardous to health, and engineering controls to reduce workplace exposure. When ILEVE was formed in 2010 as a specialist engineering-based division of CIBSE, James was a dedicated member of its steering committee, linking the regulatory body and LEV industry. He was deeply committed to the creation and use of knowledge to benefit all, having seen at first hand the life-changing consequences of exposure to hazardous substances caused by inadequate engineering controls. The most high profile example, Phil the welder, became the subject of a public awareness video to raise awareness of the risks of welding fume. See **bit.ly/CJAug17news**

On retiring from the HSE, he became ILEVE technical coordinator. His passing curtailed his ambitions in that role, but he leaves a core group of ILEVE members and colleagues from the HSE both inspired by his memory and committed to deliver safer workplaces.

From left: George Fitzpatrick; Thai Nguyen; CIBSE President Peter Y Wong; James MacNeil, from Beca; Nicola Viselli and Simon Green

30 YEARS ANZ REGION

Young Engineers Awards winners revealed

Young engineering talent recognised for contribution to building services

Mechanical engineering (Hons) student from UNSW Thai Nguyen, and graduate building services engineer from Arup Simon Green, won the top prizes at the CIBSE ANZ Young Engineers Awards.

Nguyen won the Mark Griffin Memorial Award – Student of the Year, with an outstanding brief for a sustainable retrofit of an ex-office building. The award called for entries from engineering students , studying BSc, BEng or MEng at 17 universities across Australia and New Zealand. Finalist George Fitzpatrick, civil engineering and architectural design student at Monash University, was also recognised for his submission.

Simon Green claimed The Jack Pirie Inspiring Excellence Award – Young Engineer of the Year. Judges said his entry demonstrated the largest contribution to building services in his short career. Sian Willmott, CIBSE Vic Young Engineer Network chair and judging panelist, said: 'He went beyond his day-to-day job to learn about interdisciplinary design and, consequently, make improved project decisions.' Finalist Nicola Viselli, sustainability consultant at Northrop in Sydney, was commended for her nomination and contribution to building services.

All finalists received a certificate and trophy, with the winners awarded a $1,000 prize, courtesy of award sponsor Beca.

The 2018 competition will open for entries in November 2017. Visit **www.cibse.org/cibse-anz-young-engineers-awards** for details.

New ANZ chair takes the reins

Paul Angus has been elected as the 16th chair of the CIBSE Australia and New Zealand (ANZ) Region.

A hydraulics consultant with more than 20 years' experience, Angus is an associate director at Aecom, based in Sydney. He has held various officer positions with CIBSE, including CIBSE ANZ honorary secretary for three years, New South Wales Chapter chair for three years and a member of the committee for four years.

He also has strong links with the Society of Public Health Engineers (SoPHE), having served as the Northern UK regional representative for three years.

Together with president-elect Lynne Jack, Angus was instrumental in helping set up the inaugural Scotland region, where he was regional representative for two years. He also served as the SoPHE communications officer, editing the quarterly newsletter, for around five years. Angus currently serves on the Association of Hydraulic Services Consultants Australia NSW committee.

Earlier in June, he achieved Fellow status with CIBSE – the highest status of membership – and, with only 26 in the ANZ region, he is one of the youngest.

Addressing the AGM, Angus thanked his predecessors for the tireless and enthusiastic work undertaken in the last 30 years.

Paul Angus

Region marks 30-year anniversary

In June, the CIBSE Australia and New Zealand Region celebrated 30 years since its inauguration.

The milestone was marked with a cocktail evening on 15 June at Melbourne's Sealife Aquarium, sponsored by Fantech, AG Coombs and Norman Disney & Young.

CIBSE President Peter Y Wong attended the event, along with other CIBSE members and industry leaders. In his address, Wong recognised and thanked all who had contributed to the success of the growing region.

CIBSE ANZ produced a 30-years-and-counting anniversary publication, detailing projects, photographs and memorabilia covering the history of the region, together with a look at the present and future of the building services industry in Australia and New Zealand.

The publication was sent to all CIBSE ANZ members and is available at **www.cibse.org/anz**

The future of global engineering

CIBSE President Peter Y Wong, and Engineers Australia president John McIntosh, have renewed an agreement of mutual recognition to simplify the transfer of equivalent Australian and international titles and qualifications.

The agreement was signed in June as part of the CIBSE ANZ 30th anniversary celebrations.

Paul Angus, CIBSE ANZ chair, said: 'There is a mutual respect for the integrity of the registration process that both our institutions adhere to. This agreement gives our members equivalent footing in Australia and overseas.'

Likewise, qualified Engineers Australia members will find gaining the international equivalent titles of IEng, CEng or EngTech simple through CIBSE.

Members of either organisation wishing to gain equivalent qualifications must apply though the host Institution.

New members, fellows and associates

MEMBER

Abizadeh, Sacha
London, UK

Aguilar Polo, Victoria Gabriela
London, UK

Amoako-Attah, Joseph
Grays, UK

Athanasiadi, Evangelia
Birmingham, UK

Barmby, Robin
Hull, UK

Beadsmore, Chris
Reading, UK

Bennett, Myron Henry
Bristol, UK

Birchall, Sarah Jane
St. Helens , UK

Boardman, Mark
Nottingham, UK

Bowe, Kevin
Glasgow, UK

Braid, Jonathan Dominic
Bristol, UK

Brooks, Scott Colin
Nottingham, UK

Brown, Adam James
Sheffield, UK

Brown, Christopher
Clacton-on-Sea, UK

Bruno, Elisa
London, UK

Brunyee, Martin
Rotherham, UK

Buckle, Clive
Epsom, UK

Bull, Peter
Epsom, UK

Burfitt, Andrew Brian
Teignmouth, UK

Carr, Darren John
Southampton, UK

Catterick, Christopher Paul
Leeds, UK

Chambers, Giannini
London, UK

Chan, Edmund Wei Hong
London, UK

Chan, Chun Kit
Hong Kong

Chapman, James Oliver
Sunbury-on-Thames, UK

Charles, James Elliot Leslie
Stanmore, UK

Chaston, Mark Simon
London, UK

Chau, Sheung Wai
Hong Kong, Hong Kong

Cheong, Siu Tsun, Kowloon
Hong Kong

Cheung, Man Him Eric
Hong Kong, Hong Kong

Chiu, Wing Hang Edward
New Territories, Hong Kong

Colebrook, Matthew James
Birmingham, UK

Colreavy, Brendan
Dublin 3, Ireland

Connell, Edward
London, UK

Cree, David George
Newbury, UK

Cushley, David Mark
Newtownabbey , UK

Darling, Nicholas
Bingley, UK

Das, Shaun
London, UK

Davies, Carl Lloyd
Madora Bay, Australia

De Lloyd, Henry Morgan
Oxford, UK

Devine, Christopher
Tranent, UK

Dominguez Moreno, Daniel
Chelmsford, UK

Ebrahim, Faqi Sajeet
London, UK

Faulkner, Matthew
Ilkeston, UK

Fok, Chun Ho
Hong Kong, Hong Kong

Frangiamore, Andrew
London, UK

Frey, Zoltan
Bristol, UK

Fry, Kate
Canterbury, UK

Gallagher, Ian
Newcastle upon Tyne, UK

Galrinho, Helder
London, UK

Gandhi, Raju
London, UK

Hammond, Paul
Crook, UK

Harwood, Andrew James
Longfield, UK

Hawkes, Stuart David
Birmingham, UK

Hayes, David
Plymouth, UK

Hunt, Dean
Winchester, UK

Jackson, Natasha
London, UK

Jeeves, Matthew Ronald
Watford, UK

Kearsley, Christopher Michael
Croydon, UK

Keating, Michael
Portsmouth, UK

Kells, Andrew
Lytham St. Annes, UK

Kelly, Lee Gavin
Reading, UK

Khan, Kayum
London, UK

Kidd, Royston
London, UK

Kwan, Yiu Wa
New Territories, Hong Kong

Lam, Wai Man
Tseung Kwan O, Hong Kong

Leung, Tat Wai
New Territories, Hong Kong

Li, Bo
Edwalton, UK

Liu, Chi Fai
Tsuen Wan, Hong Kong

Loke, Kok-Meng
Brentwood, UK

MacLeod, Lewis
Beckenham, UK

Mak, Hoi Lam
Shatin, Hong Kong

Mamode, Samir
London, UK

Marney, Robert
London, UK

Mastronikolaou, Konstantinos
London, UK

McClenaghan, Mark Andrew
Unit 2400, Canada

McCormick, Nigel John
Belfast, UK

McDonald, Michael
Co. Meath, Ireland

McFarlane, Neil
Glasgow, UK

Mian, Syed Sadiq Akbar
Bradford, UK

Moncur, Roger
Billingshurst, UK

Myers-Rolle, Karen
Nassau, Bahamas

Nasralla, Murtadha
London, UK

Naughton, Thomas
London, UK

Ng, Ka Wing
Aberdeen, Hong Kong

Nicholls, Charity
Epsom, UK

Noble, Jack
Newcastle upon Tyne, UK

Noel, Peter Raymond
Coulsdon, UK

O'Connor, Robert
Dublin, Ireland

Oltean, Vlad Petru
Stratford-Upon-Avon , UK

O'Reilly, Paul
London, UK

Ormrod, Brett Dylan
London, UK

Panesar, Karamvir Singh
Hornchurch, UK

Papadopoulou, Eleni
Sheffield, UK

Parkinson, Aidan Thomas
London, UK

Perkins, Adrian David
Plymouth, UK

Pevnev, Nikita Vladimirovich
London, UK

Pope, Samantha Lynda
Whiteley, UK

Qu, Shidan
Nottingham, UK

Rajha, Shaher
Amman, UK

Rashid, Atif
London, UK

Read, James
Bexley, UK

Roberts, Andrew James
Sale, UK

Rowe, Lindsay
Sheffield, UK

Savage, Stuart
Co Tyrone, UK

Scholey, Shaun
Castleford, UK

Seddon, Michael
Totton, UK

Seguro, Federico
Milton Keynes, UK

Shilton, Tom
Bristol, UK

Skubala, Andrew Clyne
Carshalton, UK

Slavcheva, Krasimira
London, UK

Smith, Steven Andrew
Benfleet, UK

Smyth, Gareth
Belfast, UK

Snutch, Samuel Robert George
Sydney, Australia

Soler, Jose Vicente
Stevenage, UK

Sorisi, David William
Bristol, UK

Sotnyk, Nikolas
Bradford, UK

Splaine, Robert
Nottingham, UK

Steele, Jonathan
London, UK

Stone, Graham Kenneth
Hornchurch, UK

Suppiah, Samantha
Edinburgh, UK

Szczepaniak, Edyta Magdalena
Grays, UK

Tesfaye, Michael
Maidenhead, UK

Tse, Ho Ching
Taikoo Shing, Hong Kong

Valero Moya, Pedro
London, UK

Vladimirou, Marios
Ferndown, UK

Warr, Matthew
Sutton Bridge, UK

Way, Gavin Hughes
Bristol, UK

Whiteley, Jonathan
Worsley, UK

Wilson, Richard
Annesley, UK

Wlodarczyk, Mariusz
Bristol, UK

Wong, Chi Wah
Mongkok, Hong Kong

Wu, Kwan Kin Ken
Ma On Shan, Hong Kong

Wudecka, Magdalena
Birmingham, UK

Yau, Tsz Chin
Sheung Shui, Hong Kong

Young, Daniel Nicholas
Liverpool, UK

ASSOCIATE

Ahmed, Mustab
Crowborough, UK

Bossa, Simon Steven
London, UK

Carter, Shaun Richard
Plymouth, UK

Clarke, Michael
London, UK

Davis, Thomas Stephen
Bristol, UK

Eburne, Oliver
Stratford Upon Avon, UK

Gleadall, Mathew
Doncaster, UK

Hall, Alexander
Solihull, UK

JI, Yuji
London, UK

Leung, Lisa
West Lothian, UK

Nicholson, James Thomas
Hull, UK

Partridge, Philip
Birmingham, UK

Pemble, Lucy Harriet
St Albans, UK

Pyloudi, Eleni
London, UK

Radley, Philip
Sittingbourne, UK

Ramsay, Steven James
Leven, UK

Robertson, Lee David
Motherwell, UK

Sessions, Mark Anthony
Derbyshire, UK

Vasey, Grant
Birmingham, UK

LICENTIATE

Akram, Attir
London, UK

Ashiq, Afaan
London, UK

Bayliss, Stuart
Stourbridge, UK

Buckley, John Patrick
Tivoli, Ireland

Burroughs, Adam
Cambridge, UK

Gas Control Systems
that perform in any environment.

EDUCATION

GAS DETECTION

COMMERCIAL KITCHENS

- Modular system
- Event logging
- Peak and time waited monitoring
- Service contracts available including detector exchange every 5 years
- Multiple relay options for BMS or alarm signalling
- Status and alarm logging
- Highly adaptable
- 10-Year panel warranty

AGDSelite features

AGDSelite has been designed to be a modular gas detection system and can accept multiple gas detectors. With extender panels, monitoring of up to 32 detectors of different gas types can be achieved.

for more information on this product and many more, visit: **medem.co.uk/products**

medem™
Maximizing Safety. Minimizing Risk.

We design it,
build it,
back it up.

0161 233 0600
medem.co.uk
enquiries@medem.co.uk

Professional and on-going training and support, built-in. CPD

Medem™ UK Limited | Project House, 19 Dallimore Road, Roundthorn Industrial Estate, Manchester M23 9NX

Follow us: @medemukltd

Keeping it green

The Repeal Bill and negotiations over the UK's exit from the EU raise questions about the country's environmental measures, says Hywel Davies

A goal for those who campaigned for the UK to leave the European Union (EU) is for Britain to open up new markets around the world and find innovative opportunities for trade and growth.

A major concern for those who wanted to remain in the union is that environmental considerations remain central to our drive for economic growth, so that we address climate change and enhance our environment while taking the new opportunities.

In its report *Principles for a sustainable Brexit*,[1] cross-party think tank Policy Connect argues that low-carbon technologies, renewable energy solutions and sustainable materials are now available at similar costs to less green alternatives. So investment in sustainable infrastructure, smart regulation and smart technologies offers possibilities for economic growth while contributing to tackling the challenges of climate change.

At the same time, clean, low-carbon technologies are a pathway to reducing pollution and to addressing the serious challenges of achieving acceptable standards of air quality in urban areas.

The circumstances around the UK air-quality plan have been well recorded elsewhere,[2] but there are very significant and urgent challenges in London, in particular. While the focus is currently on reducing levels of pollution from vehicles – especially diesel engines – there is also a need to consider how to supply acceptable indoor air quality in urban buildings. This is very much a challenge for readers of the *Journal*, and CIBSE already offers guidance in this area, in Guide A, TM40 and others.

Looking further ahead, there will be increasing demand for low- or zero-emission vehicles. Whether these are electric or hydrogen-powered is debatable, but the recent announcement from Volvo – that all of its cars will be electric or hybrid from 2019 – accelerates the drive towards these types of vehicles. Less widely discussed is the infrastructure needed to support a growing fleet of electric vehicles and the charging systems they require, or the delivery of hydrogen as a fuel. This has implications for network capacity, because charging infrastructure will be needed in city centres and in residential areas. This places additional demands on domestic electricity supply and installations, and will affect hours and peaks of demand.

These all create challenges and opportunities for services engineers. Policy decisions are needed, and then guidance on how to deliver the new infrastructure. This is an opportunity for innovation and new business. It will also require careful management and regulation to ensure the infrastructure and new vehicles are compatible and interoperable, and that electric vehicle systems are appropriately integrated into building systems.

> "Policy decisions are needed, and then guidance on how to deliver the new infrastructure"

There is also a risk if silo thinking is allowed to prevent integration between vehicles and buildings and infrastructure. Inevitably, these developments will be multinational, requiring the UK to integrate with emerging international standards, whether from inside or outside the EU.

At the same time, we are turning to the outlook for UK climate-change policy. Another briefing[3] sets out the current position, and notes the challenge we face in meeting the targets of the fourth and fifth carbon budgets (CB4 and CB5). These are set under the 2008 Climate Change Act, domestic UK legislation, unaffected directly by the decision to leave the EU. While we are currently ahead of the statutory targets, we will be falling behind by the fourth carbon budget, 2023-27. The Committee on Climate Change has estimated that the shortfall in CB5 will be 100Mt CO_2 equivalent.

As Britain prepares to leave the EU, existing European law will be transferred into UK law. After our departure, these laws may be scrutinised and repealed, or adapted through national legislation.

It is clear that EU legislation on climate change and carbon emissions has contributed to the UK's current progress in meeting domestic targets. Any review of EU-inspired regulations on buildings and energy needs to take full account of our ongoing – and more challenging – commitments.

This offers Britain a chance to overhaul environmental policies while upholding international commitments, attracting long-term investment and looking to develop – and embed – a long-term, systems-based strategy for energy, climate and emissions policy. Whether we are able to take that chance will become clear in the coming months, but it is an opportunity in which all *Journal* readers will have a clear interest.

DR HYWEL DAVIES
is technical director at CIBSE
www.cibse.org

References:

1 Principles for a sustainable Brexit bit.ly/CJAug17Hywel
2 House of Lords library briefing on air quality in London.
3 House of Lords briefing, 15 June 2017, *Leaving the EU: UK climate change policy*.

The Complete Package!

just add power and we will do the rest...

Our ground breaking air handling units offer full flexibility in control and design to provide conditioned fresh air to your system, whether it be fan coils, chilled beams, VRF or VAV. The unit consists of high specification components offering the very best in energy efficiency.

Recent Projects Include:

Warwick Street, West Norwood Cinema, Clydebank Leisure Centre, Tamesis Canary Wharf, Eastbourne College, Marischal Square, Royal Free Hospital, Allergan Biologics, KCH Pharmacy

EcoAir Box

Packaged Reverse Cycle Heat Pump R410a

Swimming Pool CSR2 Heat Recovery Unit

- *Lifetime warranty against corrosion*
- *Over 90% heat recovery*
- *Integrated control system*
- *Direct driven fans with EC motors*
- *Compact Footprint*
- *Composite construction*
- *Humidity control*

Recent Projects Include:

Champneys, Village Hotel Portsmouth, Minsthorpe Leisure Centre, Finlake Holiday Village, Clydebank Leisure Centre, Eastbourne College Pool, Aberavon Pool

British manufacturing at its best

www.ecoairbox.com info@ecoairbox.com

Telephone: 01527 492790

FEEDBACK

CIBSE's LinkedIn Group debates whether the fire at Grenfell Tower will mark a seismic change in the construction industry

Michael Kerton
The 'new' building regulations of 1667 made it mandatory for all buildings to be built of brick or stone, so there are no lessons to learn. The only way to ensure compliance is to make those who choose to take responsibility fully accountable.

Stuart Jauncey
It will be interesting to understand what measures were used for prevention, detection and protection (property and life) in the design and construction work. BS 9999 informs the process, along with many other documents. Hopefully, we'll see a shift towards greater engineering involvement in the delivery of projects typically dominated by our surveying colleagues.

Sophie Parry
I hope the outcomes for the future include maintaining design performance integrity through to completion, and a more transparent method for responsible persons to fulfil their legal duties, with annual checks that this is happening. Maybe insurers should insist on annual surveys by independent, qualified engineers to confirm the building integrity and management is sound, before taking the premium?

Dean Richards
In my opinion 'perceived' financial punishment or loss of liberty will never be comparative to actual loss of life. As professionals within the construction industry, it is our responsibility to ensure we always comply with Building Regulations and industry recommendations. All, please ensure this never happens on your watch.

Rebecca Lowe
There is a total disconnect between planning consent and building control – never the two shall meet. It has been a problem within the little 'less important' bubble of sustainability for years but, when people's safety is at stake, surely it is time to make changes?

Geoffrey Palmer
Building regulations are not retrospective. However, it is clear that any post-completion works or modifications should not reduce the provisions already made. Clearly, here something was added, removed or changed that tragically reduced the safety of this building. Ask yourself, how many small fires in tower blocks are safely put out by occupants or the brigade each week without catastrophic effects? In buildings that are not tinder, a good quality firefighting main, compartmentation and alarms are quick to retrofit and very effective.

Dan Widdon
Closing the gap in building performance means so much more than matching energy models to actual consumption.

I advocate the appointment of competent consultants for due diligence and sustainability throughout the stages of a project. Responsibility for the scope and management of these appointments lies with the developer client, with in-house engineering capability, so I could be accused of feathering my own nest.

Commissioning management and processes are critical to all aspects of building performance, regardless of the age of a building or the scope of proposed work to its structure/fabric or building services. Finally, it is important to consistently engage occupants to correlate design intent and their experience better.

Andrew Seal
It may seem self-serving, because I provide clerk-of-works services but, without our efforts, recent major projects would have been passed by building control, despite large-scale fire-stopping missing above ceiling in a few locations. One set of double doors had dampers and collars on ducts and pipes above ceiling, but all hanging in fresh air, without a fire barrier.

I don't understand why some building control officers will look at fire seals around doors but not lift a single ceiling tile. Diligent checking during construction is as important now as it has ever been.

Richard Mulley
There is no excuse for the focus on saving energy detracting from the safety of installations. As an industry, we should be dealing with both. Yet again, I feel we are manipulated by the purse-holders.

Kevin Boniface
I would argue that, in this day and age, surely it is not impossible to ensure that building refurbishments can meet the most stringent fire regulations and still achieve reduced heat losses at the same time?

Join the conversation
We want to hear from you. Talk to us.

@CIBSEJournal
CIBSE LinkedIn
www.cibse.org

Subscribe to our newsletter
Receive our top stories about building services engineering. Sign up at **cibsejournal.com**

Readers' reactions to the fire and what the industry should do now

Unanswered questions

The July 2017 *Journal* contained excellent pointers to the areas into which further investigation is needed. I have looked at many buildings where the inter-reaction of structure, finishes and building services have led to environmental failures. There may be lessons for inter-contractual cooperation, project management and quality control, as exemplified by the Teambuild competition.

I share these questions to encourage discussion of the procedures of briefing, design construction and use.

- Who designed and specified the cladding, the windows, the structure and the surfaces?
- Who designed and specified the connections at the fuzzy edge between the different parts?
- Were the designs of each part cross-referenced to valid standards and included in the specification?
- At tender stage, were modifications made? If so, was there a risk analysis carried out and fully cross-referenced to standards and codes?
- Where were the demarcations among design firms, general and specialist contractors and manufacturers?
- Who designed the 3D fixings and voids?
- Did modifications, value engineering or change orders affect the inter-reactive design?
- Were time and cost constricting requirements?
- Who prepared the installation drawings and the submissions for approvals?
- Who was responsible for site supervision and quality control – clerk of works, contractor or designer?
- Who prepared the installation drawings showing all fixing details and details of materials?
- Who prepared the operation and maintenance drawings and instructions? Did these instructions include the way in which modifications of any sort could be made to building materials, including cutting of holes?
- Was a training period included and carried out from designer to contractor to operator?

Richard Rooley FCIBSE

Time for reflection

It is vital that there should be a period of calm reflection on what actually happened before everybody rushes in with premature conclusions.

A complete analysis of the whole building construction, plus its contents, at the time of the fire is needed.

CIBSE should look hard at any prescriptive requirements resulting from the enquiry. The looseness of Part B was – partially at least – because of the desire to incorporate sustainability considerations and allow for 'new' materials; going for maximum safety now, without looking at the consequences will have undesirable consequences.

CIBSE should take an open view of the pressures for 'lean construction' and universal BIM. The emphasis must be on the real cooperation between different professions and, above all, with clients before, during and after construction.

John Moss MCIBSE

Clearing the smoke

When I was professionally active, albeit several years ago, I recall that, for multi-storey buildings, the designated escape staircase had to be equipped with pressurising fans at lowest level and smoke release vents at the top, connected to – and activated by – the fire alarm system when set off.

Self-closing fire-resisting doors from each occupied floor into the staircase were also a requirement to ensure there was a smoke-free escape route.

This is a far cheaper design solution than full sprinklers, and more effective because of the risk of 'accidental' triggering of sprinkler heads and the consequent damage.

Norman Hall MCIBSE

CIBSE Journal welcomes readers' letters, opinions, news stories, events listings, and proposals for articles.
Please send all material for possible publication to:
editor@cibsejournal.com
or write to: Alex Smith, editor, *CIBSE Journal*, CPL, 1 Cambridge Technopark, Newmarket Road, Cambridge CB5 8PB, UK.
We reserve the right to edit all letters.

READY FOR TAKE-OFF

Soft Landings enables clients to check performance against design goals. **Alex Smith** looks at how it can be used beyond energy, and speaks to an engineer, contractor and architect who are embracing the initiative

Above: Soft Landings will be used at Hampshire County Council's Whitchurch CE Primary School expansion, due to start in June 2018

The energy performance gap has dogged the construction industry for years. Buildings have been using much more energy in operation than was intended in their original designs, and evidence of failing buildings – from, among others, Innovate UK – has snowballed in recent years.

Many organisations, including CIBSE, have spent time analysing the reasons for the gap and publishing guidance for clients, consultants and contractors. Initiatives have focused on closing energy gaps – but, clearly, buildings should perform adequately in every way, not just when it comes to energy efficiency.

The Grenfell Tower fire showed the deadly consequences of buildings failing to live up to expectations, and has undermined many people's confidence in UK construction. We don't yet know exactly what caused the rapid spread of fire at Grenfell, but tests of similar tower blocks – carried out in the aftermath of the blaze – revealed cladding failing to meet Building Regulations, the potentially lethal absence of firestopping[1] during renovations, and the apparent installation of non-fire-rated doors.[2]

Question marks have also been raised about the ambiguous wording of guidance in Approved Document B of the Building Regulation governing Fire Safety, which may have led to the specification of combustible cladding.

"The identification of risks requires a project culture with time for review and collaboration – that's Soft Landings"

Shortly after the Grenfell Tower fire, the annual Soft Landings conference took place at the RIBA headquarters in London. Soft Landings is a process designed to optimise the operational performance of buildings and to meet the needs of clients. It focuses on outcomes that can be monitored during the building's design, construction and operation.

Some conference delegates – including James Warne, co-founder of building services consultant Boom Collective – believe that Soft Landings could help prevent tragedies such as Grenfell from happening again.

'Disasters like Grenfell are preventable,' says Warne. 'The identification of risks requires a project culture with time for review and collaboration. The ethos of this is staring us in the face – it's Soft Landings.'

At the start of a project, the project team and client set success criteria, which are then checked regularly during design and construction. The Soft Landings Framework stipulates post-occupation evaluation (POE) three years after project completion. (See panel, 'What is Soft Landings?') The main

focus of this framework is on the energy performance of buildings, and the health, wellbeing and productivity of occupants. However, Dr Michelle Agha-Hossein, sustainable building consultant/researcher at BSRIA, says the principles of Soft Landings can be used to set outcome targets for other areas of construction, such as accessibility and wayfinding.

Agha-Hossein notes that compliance with regulations is not voluntary, so this cannot be set as a success criteria. However, 'going beyond compliance, where applicable, could be', she adds.

For too long, says Warne, the construction industry has rewarded projects that have been quickest to build at the lowest cost – meaning quality has been compromised. If the target is compliance, he adds, we must deliver at 100%, but we have an industry culture of falling short.

'We are missing a policing of quality. This is where Soft Landings come in,' says Warne, who believes the POE helps focus the mind of the project team. 'If you tell the design and construction team there will be a test at the end of the project, there is going to be greater care in getting there,' he says.

Warne believes M&E often gets overlooked in design meetings. However, by focusing on key elements affecting the success of the project in the initial workshops, issues such as overheating or fire safety can be tackled by the whole team – not in silos, but holistically.

It is important that project members collaborate and discuss the interfaces between different design packages. For example, Warne is working on a window curtain package for a workplace project that has an impact on the design of controls, cladding, M&E and flooring. He has drawn a sketch with labels that clearly explains the interrelationships between packages (see version of this article at **www.cibsejournal.com**).

Warne says that specifications written purely in engineering terms are in danger of being ignored, and are never readily available onsite. 'A sketch with clearly written clauses help the rest of the project team understand the engineering,' he says.

WHAT IS SOFT LANDINGS?

In around 2001 an industry funded task group led by David Adamson of Cambridge University and Mark Way, and including the Usable Buildings Trust and CIBSE, was set up to explore the concept of 'sea trials' for buildings. Based on work done by Way for Cambridge and a major pharmaceutical client, this evolved into Soft Landings. A Soft Landings Framework Guide was written by BSRIA – with the help of the Usable Buildings Trust – in 2009, and updated in 2014. The guide lays out the activities to be carried out at each stage.[3] The principles of Soft Landings have been incorporated into BS 8536-1:2015 *Briefing for design and construction – Part 1: Code of practice for facilities management (Buildings infrastructure).*

Stage 1
Inception and briefing: Designers, constructors and end users spend time with the client to fully understand their needs, design objectives, and roles and responsibilities.

Stage 2
Design development and construction: Teams review insights from other projects and engage in reality-checking workshops to ensure design is buildable, manageable and maintainable.

Stage 3
Pre-handover: Teams prepare building for handover, and ensure FM understands systems.

Stage 4
Initial aftercare: Team deals with emerging problems for six to eight months.

Stage 5
Years 1-3 extended aftercare and POE: Operational performance is optimised through energy monitoring, inspections, fine-tuning, and occupant-satisfaction surveys.

Soft Landings champions for the client and contractor ensure objectives are met. In 2016, a form of Soft Landings was made mandatory for all new central government projects and major refurbishments.

Lessons learned

A key element of Soft Landings is the passing on of knowledge to subsequent projects. 'The UK industry has a good design process for innovation, but we don't have a good way of passing on lessons learned from project to project,' says Warne.

'The learning loop is important,' adds Alasdair Donn, a principal consultant at contractor Willmott Dixon, who says his firm is committed to the philosophy of Soft Landings, and employs an in-house team to study the operational performance of some projects. 'We learn a lot from how things perform. We've selected some projects and followed them after handover.'

Warne views Soft Landings as closely tied to the 'new professionalism' described in a debate initiated by cross-profession group the Edge in 2013. It proposed that professionals needed to have a stronger role in protecting the public through leadership, impartiality, and sharing knowledge and expertise. The debate outcome »

Left: There is a formal Soft Landings contract in place for the University of East Anglia's Enterprise Centre

Right: The reality-checking process of Soft Landings helped secure a Breeam Outstanding rating for the London Fire Brigade's Dockhead station

» proposed a better procurement process and more knowledge about performance in use – both core principles of Soft Landings.

Soft Landings can also be cost-effective, says Agha-Hossein. 'There is perception among clients that Soft Landings is expensive, but it should not cost anything up until POE,' she adds. The POE element of Soft Landings is an addition to standard forms of procurement, so requires additional funding. Depending on the size and complexity of a project, £30,000 to £60,000 is a reasonable range to fund a three-year POE, according to Agha-Hossein. 'These costs are modest compared to the cost of unhappy occupants and the potential cost of high utility bills from a non-performing building,' she says.

Mike Chater, senior architect at Hampshire County Council, agrees that Soft Landings can be perceived as expensive. 'It was clear against the context of cuts in the public sector that it would only gain traction if it was low or zero cost,' he says. 'I did a mapping exercise to overlay the Soft Landings Framework on our processes. We found we only had to make a small tweak to our practice to align with it.'

Chater says it is difficult to justify employing Soft Landings champions on small projects; in Hampshire this role is assumed by the architect during design and construction, who is joined by a property-management surveyor to engage with schools after handover, to check on operational issues during the defects liability period. The council is now applying Soft Landings on a £200m-plus school building/refurbishment programme (see panel, 'Soft landings in practice'). On large secondary school projects, POE is worth the investment, according to Chater. Where there is no POE, Hampshire includes Soft Landings activities in preliminaries for bidders, and expects them to be zero cost.

To get full value from Soft Landings, Warne believes clients should carry out POE – but if there is not the budget, they could at least work with someone to identify risks to the project.

Agha-Hossein says Soft Landings can be adopted on any building project; the Framework works on small and big schemes, and only the scale and frequency of some activities may change depending on the size and complexity of the project. BSRIA is currently looking at creating a Soft Landings framework for residential buildings.

> "The Framework works on small and big schemes, and only the scale and frequency of some activities may change depending on the size and complexity of the project"

Classroom teaching lectern interfaces

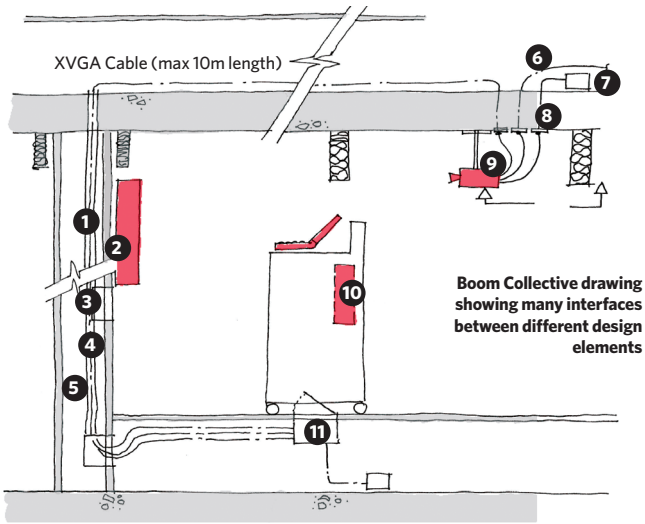

1 Two-compartment trunking by M&E TC run in plasterboard partition
2 Interactive whiteboard
3 One 13 Amp socket to supply LCD screens and one USB terminal to interactive whiteboard
4 USB data link (Max 5-metre length) to interactive whiteboard
5 Containment by M&E TC, wiring by infrastructure TC
6 Cables laid loose in floor void
7 Cat 6 data and modular wiring in floor void above
8 High-level terminals mounted adjacent to projector
9 Project to be mounted off soffit, sufficiently supported to ensure stability with the underside of camera being level with the underside of acoustic baffle
10 Mobile lectern supplied in FF&F package specification to include integral speakers
11 Four compartment floor boxes

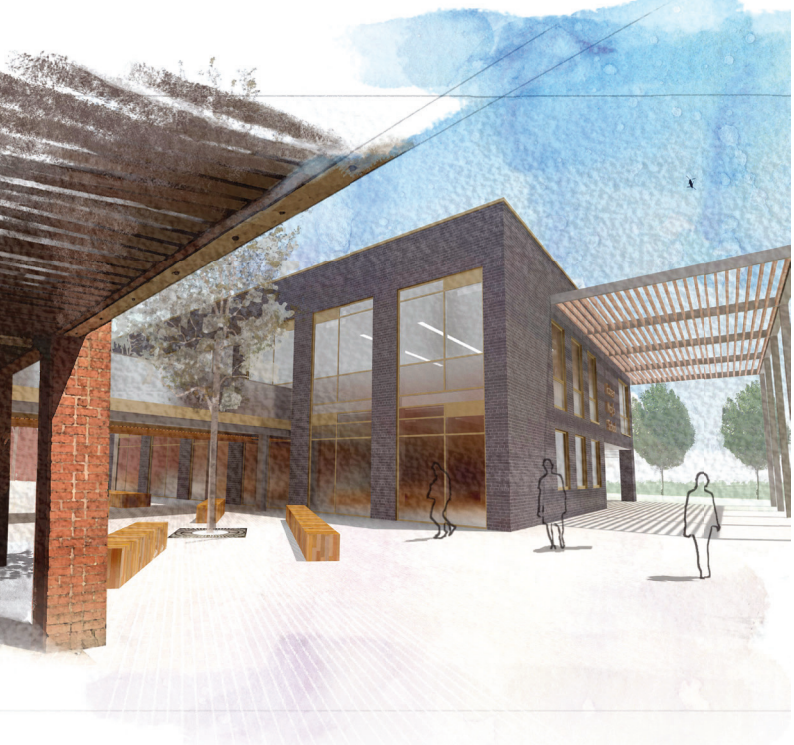

The expansion of Hampshire CC's Robert May's Secondary School starts this month

Donn claims adoption of Soft Landings among clients is increasing, with some seeing the light after previously suffering problems in construction and operation. 'Clients have seen how Soft Landings have given them less risk and more certainty in operation,' he says.

For the process to really catch on, however, there needs to be more flexibility in contracts, adds Donn, who says a number of clients are working Soft Landings into contractual frameworks, and focusing on outcomes. 'They are adding employer's requirements of the design team and contractor to carry out Soft Landing activities.'

Chater says Soft Landings offer a stepping-stone to better collaboration with other professions and he urges his fellow architects to become more engaged with the Soft Landings process. 'If we can't design buildings that function well, we've failed at our job,,' he says.

Warne agrees, and says Soft Landings enables greater collaboration, which fosters mutual respect and better integration of design solutions. He believes Soft Landings should become an integral part of everyone's work process. 'Our buildings are not performing,' he says. 'They're failing left, right and centre. Soft landings should not be a choice.' **CJ**

References:

1 'Is my tower block safe?'BBC website, 14th July 2017 **bbc.in/2tiS54a**
2 London council that evacuated building knew of fire door problem five years ago, *The Guardian*, 28 June 2017 **bit.ly/2tiBkGE**
3 Soft Landings, BSRIA **bit.ly/2gNcZH4**
4 Soft Landings and Government Soft Landings, 2015, BSRIA **bit.ly/2ueyOPE**

SOFT LANDINGS IN PRACTICE

Hampshire County Council is applying Soft Landings across the majority of its school expansion capital programme, worth more than £200m in total. **Mike Chater** is a senior architect in the practice and explains how it works

One of the most important actions is to set up a Soft Landings workshop, which normally takes place at the end of Riba Work Stage/3/D. This brings together interested parties, including the client, headteacher, business manager, services engineers, contractor, caretaker and property-management representative, who has responsibility for ongoing maintenance. This workshop is key, as it's often the only opportunity to get everyone together.

Participants are encouraged to voice any potential issues that could compromise the success of the project. Discussions are split into 'activities', which cover 'architecture and interiors', landscaping, building services and controls. People associate Soft Landings with building services, but it can be used to flag up any design and operational issues. For instance, the school business manager in a secondary school asked that the landscaping in front of her office didn't obscure her view of the courtyard in the summer; maintaining clear views of this area was an important part of the school's strategy for safeguarding children.

Notes from the workshop are collated into a spreadsheet, which lists the risks that have been identified, alongside lessons learned from previous projects. It also outlines a series of actions to mitigate the risks, which are apportioned to the design, construction/commissioning and operation stages of the project. We encourage regular reviews of this document to check if the actions to mitigate risk have been completed. This is led by the architect (client's Soft Landings champion) and the site agent (contractor's champion). We call it the 'defects risk schedule', as contractors are familiar with the term zero defects, so take note. Value-engineering decisions are also reviewed in the Soft Landings process.

If risks have been highlighted but not actioned, you can go back to the document at defects stage to get them rectified. The schedule is our history of 'old chestnuts', which get fed into our 'design and technical and review' process, so there is an awareness of them for future projects.

Our handover phase is expanded from the original BSRIA Soft Landings Framework. We have created another onsite workshop, which happens two to three months before handover or the first major sectional completion. It is held on site with the contractor and school, and is about working backwards from the completion date to ensure all parties understand their responsibilities for ordering, supply and install. At handover, we also make sure we have a firm commitment to seasonal commissioning dates.

Finally, we plan a series of meetings during the aftercare period, using the defects risk register to inform the fine-tuning of the building. We ensure more collaboration with our property management surveyors, who will take over the FM as part of our service level agreement with the schools – so it is in everyone's interest to ensure familiarisation with both the building and services during a 12-month defects period.

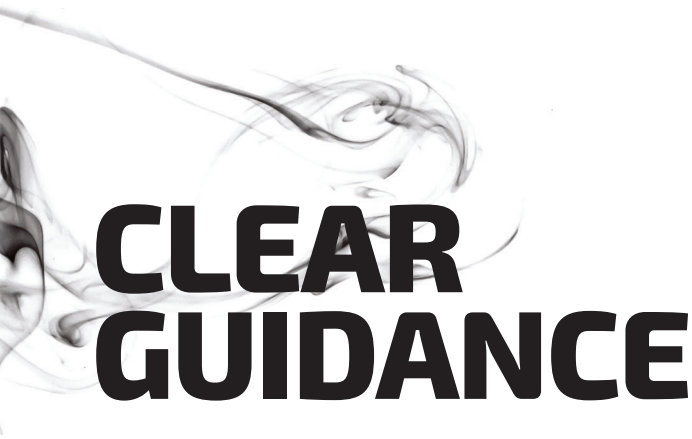

CLEAR GUIDANCE

The latest version of CIBSE Guide E *Fire Safety Engineering* highlights the importance of smoke control in high-rise buildings. MKA Fire MD and Guide E chair **Martin Kealy** reports

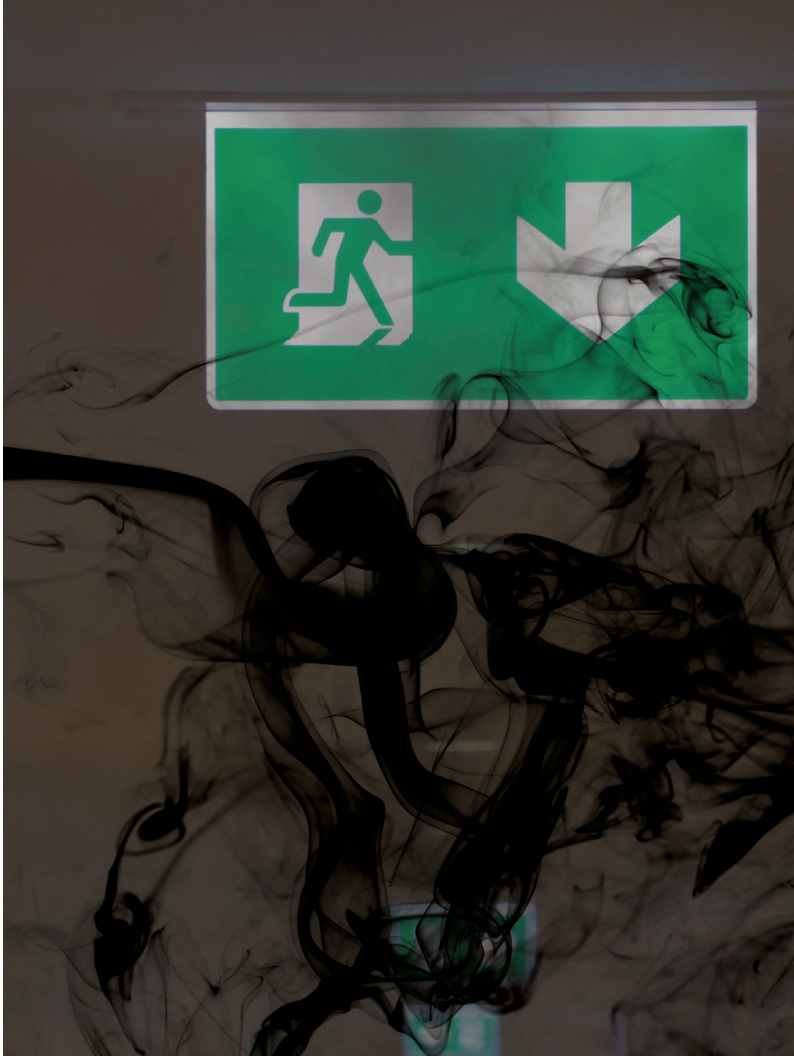

The tragic fire at Grenfell Tower, in West London, has turned the spotlight on the importance of fire engineering in buildings.

As with all major blazes, there are many contributory factors that transform a nuisance fire into a serious one that leads to large loss of life.

Following the public inquiry, it is likely that important changes will be made in the UK's fire codes of practice and associated guidance documents, and how they are enforced.

But, until those changes are made, designers must continue to create well-performing high-rise buildings, and – rather than focusing on one issue – they should consider the broader fire life safety aspects of a building to ensure designs are robust.

CIBSE Guide E 2017 addresses the full range of fire life safety issues, from evacuating the building and giving access for firefighters, to controlling the spread of smoke and fire, including new guidance on fire safety of building façades and external wall construction.

The guide also includes more references to international good design practice, including North American codes, standards and guidance that is frequently used in the Middle East and Asia. Because the UK regulations are 'functional performance standards', international codes and practices can also be applied here.

> "The system should be as simple and as reliable as possible – an overly complex design can lead to failure"

Chapter 10 on smoke ventilation has been substantially updated to simplify it and make it relevant to its audience. This article highlights some of the guidance contained in the new chapter and describes the objectives of smoke ventilation systems and addresses system considerations, tenability criteria, and system design and components.

Smoke control in high-rise buildings

Smoke is the major risk to occupants in a high-rise building fire. The toxic products of fire include irritant and narcotic components so, as well as preventing escape routes from being used because of poor visibility, smoke also causes disorientation, incapacity or death.

The tenability design criteria – including temperature, radiation visibility and toxicity – are supplied in detail in Guide E.

Unless controlled, smoke can spread from the source of the fire. Measures by which its movement can be minimised and controlled include passive barriers, fire-resisting construction and ventilation systems, often in combination with other active systems.

At the outset, it should be clear why a smoke control system is required and how it meets the objectives of the overall fire strategy.

For high-rise buildings, there will be a greater requirement because some form of phased evacuation will be in place, meaning people will remain in the building longer than a low-rise building.

For office towers, only the fire floor, and those adjacent to the fire floor, are evacuated in the first phase, followed by others as required.

For residential towers, a stay-in-place policy is currently typical. Another design consideration is that firefighters need to be able to attack the fire and rescue people. The system should be as simple and as reliable as possible, because an overly complex design can lead to failure. This is especially true in a high-rise building with multiple floors, resulting in an increased number of potential points of failure.

Smoke control systems should be simple and reliable

Design objectives

The objectives of the smoke control systems in a high-rise may include:

- Minimising the risk of smoke spread to other floors of the building because of phased evacuation
- Maintaining staircases free of smoke
- Maintaining escape corridors free of smoke.

Maintaining a clear layer in the room of origin is usually not an objective as travel distances in high-rises tend to be relatively short. Clear layer systems are more suited to shopping centres and exhibition halls. Guide E details advice on design of clear-layer systems.

Minimising spread of smoke and keeping escape routes clear

Typically, the method for achieving this is to install fire-rated floor construction. The weak links are where the floors are penetrated. This includes stairs, lift shafts and mechanical, electrical and plumbing shafts.

Because stairs contain openable doors and lifts contain non-smoke-rated doors they will leak smoke, so additional measures are required, including another set of doors forming a smoke lobby.

The measures for reducing smoke spread to other floors will also assist in keeping staircases free of smoke. CIBSE Guide E gives detailed advice on the various control methods, including natural smoke shafts, powered ventilation and pressurisation systems.

For buildings such as open-plan office towers, there are no corridors to protect, and people will escape directly to the staircases – the distance to the stairs being limited by code.

However, in residential buildings, the common corridors leading to the stairs – although limited in length – extend travel distances to the stairs, enabling smoke control.

Robust smoke control design

A basic assumption of the codes is that a design is based on a single fire event – one fire at any one time. A robust system should consider the potential that smoke may spread to an adjacent, or multiple, floors.

An overly complex design should be avoided. One with many moving parts and different operational modes reduces reliability and increases the chance of system failure.

Sprinklers play a significant role in any design. If the sprinklers fail to extinguish the fire, they will at least significantly reduce the temperature and volumes of smoke. This is important when designing stair-pressurisation systems.

US codes and standards recognise the role of sprinklers and allow the pressure differences in stairs to be reduced from 25Pa to 12.5Pa, compared with 50Pa for a European system.

Stair pressurisation is commonly used for high-rise buildings overseas, with many international codes requiring stair-pressurisation systems only. In the UK, such systems are often avoided because their design, testing and maintenance are considered onerous.

The design of stair-pressurisation systems using US codes is less imposing, and this may encourage UK designers to use them. Both approaches and calculation methods are described in the new Guide E. **CJ**

- CIBSE Guide E will be available at **ww.cibse.org/knowledge** in the autumn.

- **MARTIN KEALY** MCIBSE is chair of CIBSE Guide E Steering Committee and managing director and principal fire consultant at MKA Fire

LEADING THE RENAISSANCE

BDP's chair of building services engineering **Andrew Swain-Smith** says he is feeling bullish about the practice's growth prospects – and this was before news it had won a prestigious contract at the Palace of Westminster

Every Friday afternoon at multidisciplinary consultant BDP, one of the design disciplines takes its turn to run the office's licensed bar. During my visit, the structural engineers were serving; on another week, it could be the building services engineers' turn.

The rationale behind this is to get to know colleagues from other disciplines, and to swap ideas and opinions. Andrew Swain-Smith, BDP's chair of building services engineering is a fan: 'You speak to people you've never spoken to before; there are no barriers to communication. It's not cliquey at all.'

There would have been a few toasts at the bar last month, after the Houses of Parliament awarded BDP a contract to carry out preliminary work to safeguard the future of the Palace of Westminster. The consultant will provide architectural and building services, while US engineering giant CH2M will supply programme, project and cost management.

Details of the contract reveal the wide range of disciplines at BDP, from architecture to building services engineering, and specialist lighting to people-flow modelling (see News, page 8). The contracts are worth £12m over the rest of the financial year, and are expected to increase in subsequent years. 'It's the opportunity of a lifetime,' says Swain-Smith. 'It's a World Heritage site and probably the most iconic building in the UK.'

A Houses of Parliament statement said the bid winners offered the best combination of quality and price. It would also have been swayed by the string of heritage projects BDP has worked on recently, including the Royal Albert Hall, the National Maritime Museum, University College London's (UCL's) Senate House, and the National Gallery of Ireland.

BDP's multidiscipline ethos and passion for integrated, collaborative design also helped secure the contract, according to Swain-Smith. 'We have everything under one roof – engineers, architects, acoustic and lighting specialists, building physicists and sustainability consultants.'

Integrating disciplines is an important philosophy at BDP, which was founded in 1961. 'You have to have an interest in all elements of design here. It's not about overlaying building services on someone else's designs. It's not what we do – it's about integration,' says Swain-Smith. 'You won't survive here if you don't appreciate the bigger picture and the architects' priorities.'

Having design-friendly engineers makes the MEP team very attractive to other architects, according to Swain-Smith. Around 60% of the work in his department is with architects outside of BDP, including illustrious names such as Herzog and de Meuron, Nicholas Hare and Wilkinson Eyre. Part of Swain-Smith's growth strategy is to secure more work in which other BDP disciplines are working. 'We want to chase and secure opportunities with clients who are open to having the whole design team working for one organisation,' he says.

Swain-Smith claims engineering is enjoying a renaissance at BDP, and two building services principals – Robert Ferry, from the Manchester office, and James Hepburn, from London – joined the

> "Don't design passively for passive sake, and don't go the other route of over-complex controls and systems. Have a common-sense approach"

SWAIN-SMITH'S CAREER

Andrew Swain-Smith's first job at BDP was the Variety Club Building at Great Ormond Street Hospital. However, he cut his teeth in the education sector, in which he led the engineering profession for 20 of his 24 years at the practice. During that time, he estimates he has overseen £1.5bn worth of schools. Other buildings on his CV include the Millennium Building at Wimbledon, for the All England Lawn Tennis Club, and The Garrick Club.

Swain-Smith studied environmental engineering at London South Bank University in the 1980s, and the broad subject matter covered means he also has a good understanding of areas such as acoustics and lighting. This has stood him in good stead for BDP's multidisciplinary approach.

In 2010, he become a board director and, in 2015, was made BDP's head of building services in London. In March, Swain-Smith was appointed chair of building services across the practice, taking charge of hubs in Birmingham and Dublin, as well as in London.

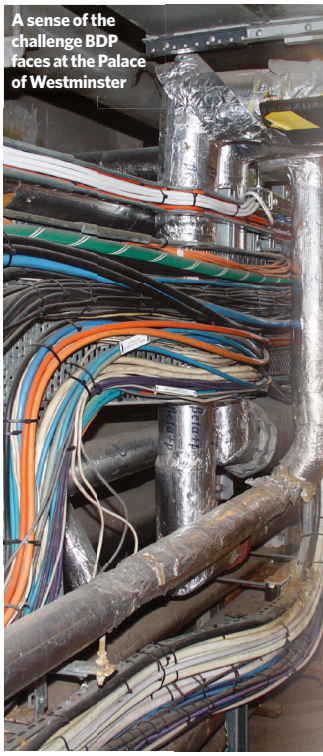

A sense of the challenge BDP faces at the Palace of Westminster

board recently. This, says Swain-Smith, recognises the influence of building services engineering in fundamental design decisions.

Building information modelling (BIM) has helped bring services engineers to the fore, he adds, and a live Revit model is used widely at BDP, at every design stage. 'It's now a core tool for us in terms of designing. It enables us to appraise options and provide very fast feedback to architects and clients,' says Swain-Smith, who describes BDP as offering people-friendly engineering. This means understanding clients and working collaboratively to ensure designs meet the needs of end users.

'Don't design passively for passive sake, and don't go the other route of over-complex controls and mechanical systems,' says Swain-Smith. 'You need to have a common-sense approach and – at each stage of the process – step back and ask, why are we doing that? Is there a simpler approach? Can you look the client in the eye at handover and know that they understand how to use the building?'

This chimes with the Soft Landings Framework, which requires project teams to review design solutions regularly and carry out post-occupancy evaluations (POE) three years after building completion.

50

Number of engineers that BDP is aiming to recruit by 2020

BDP has a formal Soft Landing contract on the new Enterprise Centre in Norwich that involves interviewing occupants, as well as a POE. This allows the project team to identify any issues with the building while it is in operation. The consultancy is into the third year of monitoring the Passivhaus-certified centre, and the building's performance is exceeding expectations. Despite this success, Swain-Smith says formal Soft Landings are quite rare. BDP's next one will be for the UCL Student Centre .

In 2016, BDP was bought by Nippon Koei, which specialises in large infrastructure projects. This offers BDP the chance to become the Japanese engineering giant's design arm on big civil projects. 'The two companies tend to work in different areas and, as a practice, we haven't changed,' says Swain-Smith. 'It gives us more opportunities, particularly overseas.'

He is confident about growth, predicting that BDP will recruit up to 50 engineers by 2020. Swain says winning the Palace of Westminster contract means the consultancy will now attract 'people with an obsession for heritage buildings', while some of the positions will be filled by the engineering apprentices that BDP has been taking on since 2012.

'We're huge supporters of apprentices,' says Swain-Smith. 'We're telling young people we will employ you, send you to college and pay you a salary. After two years, we will sponsor you to go to university so you don't have a student loan. It's a win-win all round.'

Swain-Smith is bullish about BDP's prospects. 'In my time at BDP we have come up from mid-table to be fighting with the big guns,' he says. CJ

WINNING FORMULA

DPR Construction was adamant that the refurbishment of its 50-year-old, industrial-style San Francisco office had to achieve net-positive energy status. **Andy Pearson** explains how Elementa Consulting's simple all-electric design helped the firm achieve its goal

DPR Construction is a US-based contractor with a reputation for pioneering net-positive energy projects – buildings that produce more energy than they consume. It built the David and Lucile Packard Foundation headquarters in California – a net-positive energy building and CIBSE 2016 award winner; its San Diego office achieved net-positive energy status in 2010; and its Phoenix office did the same in 2013. So when it decided to relocate its San Francisco office, DPR Construction set out to make this a net-positive energy scheme, too.

The building it selected to house its 90-strong workforce was a 50-year-old, 1,900m², two-storey, industrial-style building, boxed in on its north, west and south elevations by adjacent buildings, and topped by a gently arched roof. Where some might have seen a tired building beyond salvage, DPR saw a project with the potential to become a pillar of sustainability.

In addition to offices, the scheme was to include conference rooms, breakout areas, a kitchen and a fitness centre, to help promote health and wellbeing. However, despite DPR Construction's overarching requirement for the retrofitted building to produce more energy than it consumed over the course of a year, the contractor did not want to pay a premium for this.

To add to the task facing building services engineer Elementa Consulting, Member of Integral Group, and FME Architecture, the contractor wanted the scheme to be designed, built and ready for occupation within 10 months, when the lease on its current premises was due to expire. Benjamin Galuza, principal at Elementa Consulting, said: 'The challenge set by the client was to design, build and have operational a net-positive energy office within a 10-month period, at no additional cost compared to a market-rate building. It was not an aspiration, but a project requirement.'

The starting point in developing a retrofit solution capable of satisfying the brief was a series of early collaborative workshops. In these, the team of architects, building services engineers and quantity surveyors were helped

Satisfaction survey

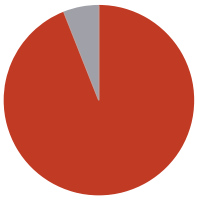

● 94% satisfaction

Result of occupant satisfaction survey conducted by UC Berkeley Center for the Built Environment in 2016

PROJECT TEAM

Client: DPR Construction
Architect: FME Architecture
Contractor: DPR Construction
MEP: Elementa, Member of Integral Group
Landscape and green-wall design: Habitat Horticulture
Structural: Paradigm Structural Engineers
Interior design: FME Architecture
LEED consultant: Environmental Building Strategies Key Subcontractors
Mechanical design build contractor: Anderson, Rowe & Buckley
Electrical design build subcontractor: Decker Electric

in the design development by the client, who – perhaps unsurprisingly – was main contractor for the build.

A total project cost of approximately £1,866 per m² was allowed for the scheme. 'This is comparable to what others in the region are paying, although the proposed photovoltaic (PV) installation expense meant we had to find ways to shave costs in other areas, through creative and integrated design solutions, to meet the budget,' says Galuza. 'Each design element has to serve at least two or three functions that provide value.'

'The building's location – surrounded by buildings on three sides and with a major thoroughfare on the fourth – prevented the use of typical passive design strategies, such as natural ventilation and 100% daylight autonomy,' he adds. Instead, the focus was on creating a high-performance building envelope – tight and highly insulated – to enable a simple, off-the-shelf building services solution to be developed.

To speed up design development, Elementa used what Galuza calls 'whole-building spreadsheet energy models', to get rapid, simple payback information for energy-use assessments. The lease was only seven years, so paybacks had to be within this term.

As an example, the tools enabled the team quickly to assess the optimum thickness of fabric insulation to be added. 'Because we were in a design-and-build situation, we asked how much the installed cost would be for 75mm, 100mm and 150mm of roof insulation,' says Galuza. 'We were then able to assess the cost benefit in real time, so we could make decisions pretty quickly to meet the programme.'

The outcome of the modelling is a roof with 100mm of insulation added externally. The design also included the addition of two large roof lights, to bring daylight into the heart of the building, so reducing the lighting load.

Building energy usage data

	PV production* (kWh)			Energy consumption (kWh)		
Month	Metered data	Modelled (uncalibrated)* data	Delta	Metered data	Modelled (uncalibrated)* data	Delta
August 2014	15,751	17,896	-13.6%	10,596	9,208	13.1%
September 2014	12,973	15,107	-16.4%	10,209	9,272	9.2%
October 2014	10,556	10,914	-3.4%	10,419	11,165	-7.2%
November 2014	6,826	7,190	-5.3%	12,559	13,536	-7.8%
December 2014	4,068	6,011	-47.8%	11,835	18,571	-56.9%
January 2015	7,042	6,165	12.5%	13,725	20,257	-47.6%
February 2015	8,724	8,428	3.4%	10,077	14,950	-48.4%
March 2015	14,186	12,760	10.1%	10,679	13,645	-27.8%
April 2015	17,921	15,540	13.3%	10,003	11,263	-12.6%
May 2015	15,684	17,972	-14.6%	12,397	10,273	17.1%
June 2015	19,571	19,329	1.2%	10,599	9,627	9.2%
July 2015	18,127	19,789	-9.2%	11,865	9,468	20.2%
Annual total	**152,029**	**157,101**	**-3.3%**	**134,853**	**151,235**	**12.1%**

***Note: additional onsite renewable energy is generated by the solar-thermal system for DHW; however, this occurs behind the utility meter. The modelled data has not been calibrated against actual utilisation schedules or climate data**

"The PV installation meant we had to find ways to shave costs in other areas through creative design solutions"

£1,866

Approximate cost per m² allowed for the DPR Construction HQ project

The roof lights are fitted with electrochromic glazing to limit uncontrolled solar gains, and a light sensor on the roof adjusts the tint of the glass based on outdoor light levels.

'On foggy San Francisco days, the skylights provide high-quality diffuse light, with the dynamic glazing giving a solar heat gain coefficient (SHGC) of 0.41,' says Galuza. 'On sunny days, the skylights automatically adjust down to an SHGC of 0.09, to help maintain indoor thermal and visual comfort.'

The team was fortunate in that the modifications to the existing roof were incorporated into works to upgrade its structural performance after revisions to the Californian seismic codes.

HVAC systems

Inside the building's insulated envelope, development of the building services design was helped by DPR Construction's requirement to target net-positive energy certification through the International Living Future Institute. 'Net-positive certification means that onsite combustion is not permitted, so we had to design the services to be 100% electric,' says Galuza.

Photovoltaics are the primary source of energy. The new roof lights and other openings meant about 60% of the roof area was available to house the PV installation. This will produce 118kWp of electricity. An energy use intensity (EUI) target of 74.3 kWh·m^{-2} per year was set for the building as the maximum that could be offset by the PV installation.

'For a net-positive energy building, you cannot use more energy than you can generate,' says Galuza. 'You know how much energy the PVs will produce over a year, so you have to work back from that point »

» – this becomes your annual energy budget. Most people do the same thing with their household budgets; you can't spend more than you make without going into debt.'

The scheme also includes a couple of solar-thermal panels. Low-flow fixtures help reduce hot-water demand, enabling the solar-thermal system to meet the building's entire hot-water load for much of the year – saving 3,400kWh per year of energy, and ensuring a five-year return on investment. For times of high demand or low sun, the system includes a direct electric heating backup.

The requirement for the building to be 100% electric meant there was no need to replace the gas-fired boiler. Instead, Elementa specified an all-electric variable refrigerant flow (VRF) system both to heat and cool the office. Refrigerant is piped from rooftop condensing units to fan coil units serving the various spaces.

'The beauty of the system is that it enables heat to be transferred from spaces requiring cooling to spaces that require heating, and vice versa,' says Galuza. 'For example, heat can be moved from the core of the building to its perimeter without having to engage the compressors. The system contributed to a 37% reduction in HVAC energy consumption.'

Fresh air is ducted to mixing boxes mounted at the rear of the VRF fan coil units. Occupant comfort is assured by the fresh-air system supplying 30% more air than the minimum local code requirement.

Carbon dioxide sensors – located in densely occupied areas of the office – regulate the volume of air supplied by dedicated outdoor air-handling units. These are fitted with air-to-air plate heat exchangers, complete with bypass damper, to enable heating or cooling energy to transfer from exhaust air, to temper the supply. 'The system is designed to take advantage of the Bay Area's mild climate by using free cooling through air-side economising for most of the year – which is not too dissimilar to southern England,' says Galuza.

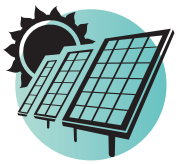

118 kWp

Generating capacity of the solar PV installation on the roof of the building

"Indoor air quality is enhanced further by the inclusion of three walls of living moss, which help remove VOCs"

To further decrease energy use, the indoor air temperature is allowed to rise slightly in the open office and lobby areas, with thermal comfort maintained by large, 8ft-diameter, Big Ass ceiling fans. These are used to increase air speeds and to limit stratification, and are controlled through the building management system.

As indoor temperatures change, the fan speed is varied accordingly, to ensure comfortable conditions are maintained.

The indoor air quality is enhanced further by the inclusion of three walls of living moss, which help remove volatile organic compounds (VOCs) from the air, while giving people a connection to nature.

Office lighting is LED to keep electricity demand to a minimum. The lack of perimeter windows means most daylight enters the building through the two skylights, an existing atrium and reflective light tubes in some of the office areas. LED light levels are controlled through a combination of daylight-level and occupancy sensors.

Hitting targets

In preparation for the office move, DPR Construction carried out a detailed study of all plug-and-process equipment loads, to identify items that consumed large amounts of electricity and determine which would make the move and which would be replaced.

Elementa's electrical design includes smart-plug strips that turn off all non-essential equipment, such as computer monitors. There is also what Galuza calls 'a building plug-load kill switch', which is designed to be activated by the last person to leave the building. The small-power system includes 42 circuit transducer (CT) meter points so energy use can be tracked and dissected. To keep the occupants abreast

Energy use modelled vs energy use metered

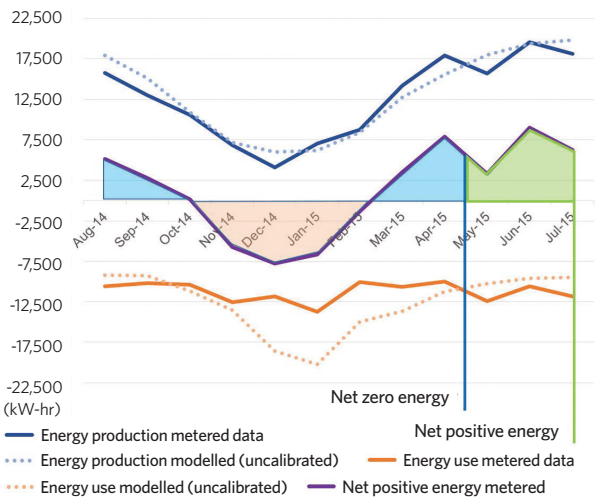

Credit: Benjamin Galuza

Building energy totals

Actual energy use

134,800 kWh

Actual energy use intensity

64 kWh·m^{-2}

Actual electricity generated

152,000 kWh

Net energy generation

17,200 kWh

of the ongoing building performance across all major environmental indicators – including energy, water, transportation, indoor environmental quality and waste – the walls of the building's lobby are adorned with an LEED Dynamic Plaque and an energy dashboard.

The building opened on time and on budget in June 2014, and Elementa stayed for a two-year post-occupancy commissioning period, to ensure the building met its energy targets.

Initially, the building was not tracking towards its energy goals; however, by adjusting equipment schedules, modifying set points and recommissioning the lighting controls, the building's energy consumption decreased. Cleaning the solar panels more regularly also ensured maximum output from the PVs.

The building achieved its goal of net-positive energy certification in late 2015. Its LEED Platinum certification is also being finalised.

DPR Construction succeeded in its aim to develop a simple, cost-effective solution to meet its net-positive energy target for the building, while remaining within the total project budget of £1,866 per m^2; this, Galuza says, was 'below typical "market rate" for refurbishment projects in San Francisco at the time'. The project's mechanical cost – at £174 per m^2 – compares very favourably with the US average of £191 per m^2 for office buildings, and with those in the Bay Area, where total HVAC costs can be in the region of £249 per m^2 to £332 per m^2.

The building's low-energy design has been so successful that it is being used increasingly to host industry events and open houses. Ironically, these have proved so popular that those coming to see the net-positive energy building in operation are causing an increase in its energy consumption.

This amount of after-hours activity was not part of the original energy strategy, but Galuza says that 'ongoing monitoring and energy management has ensured the scheme has remained net-positive'.

A study by Ecological Building Network and StopWaste.org found that – with the PV system – the building operates at an emissions rate of 5.3 tonnes CO_{2e} per year.

This figure does not include the carbon savings – realised before DPR moved into the building – which came from the reduced embodied carbon emissions from reusing an existing building.

Embodied carbon was determined to be one-third of what it would have been for an equivalent new-build. Over a 30-year life-cycle, emissions from the same-sized, traditional office building would be 71 tonnes CO_{2e} per year, while a new code-compliant building in California would generate about 45 tonnes CO_{2e} per year.

The business case and value of a net-positive energy building retrofit came from DPR Construction. The 'value add', says Galuza, is 'an increase in occupant and employee satisfaction, and the marketing value the building provides by reinforcing DPR Construction's position as a leader in sustainable construction'.

In 2016, a building-user satisfaction survey of the occupants was conducted by the University of California (UC) Berkeley Center for the Built Environment. It found an exceptional occupant satisfaction rate of 94%, which is significantly higher than the 73% figure of a typical benchmark building.

The scheme certainly satisfied the judges of this year's CIBSE Building Performance Awards, where it won International Project of the Year. CJ

GETTING WARMER...

CIBSE's new guidance to assess overheating risk in homes is timely, as UK summer temperatures soar. **Liza Young** finds out why TM59 is a must-read for designers

In June, the UK experienced its hottest temperatures since the 1976 heatwave, when the mercury hit 35°C in Southampton.

Heatwaves of this nature are no longer a thing of the past, and temperatures – especially in cities that suffer the urban heat island effect – are set to rise.

Many factors contribute to overheating risk in new or refurbished homes, including: high proportions of glazing; thermally insulating and single-aspect designs; community heating systems; and inadequate natural ventilation strategies. Buildings that cannot dissipate heat gains are also at risk.

The health and wellbeing impacts of overheating can be significant for residents, resulting in stress, anxiety, sleep deprivation and even early deaths in heatwaves, especially for vulnerable occupants. The situation is predicted to get worse. The Committee on Climate Change estimates that deaths arising from overheating could rise from 2,000 per year in 2015 to 7,000 per year by the 2050s.

The way people experience temperature is subjective too; it can depend on what they're doing, how they're dressed, their health and fitness, and whether they are male or female.

CIBSE's new technical memorandum aims to address the complex way buildings respond to external temperatures and present the industry with a standardised methodology to assess overheating risk. The authors of TM59 *Design methodology for the assessment of overheating risk in homes* believe it should become an essential item in the designer's toolbox.

The methodology

TM59 methodology shares its first criterion with that of the earlier TM52 *The limits of thermal comfort: avoiding overheating in European buildings* – the percentage of hours that cannot exceed the target temperature, based on the running mean. It applies to all occupied spaces. The second criterion is CIBSE Guide A's number of hours exceeding 26°C in bedrooms at night – the temperature above which research shows sleep patterns are disturbed.

Also contained in TM59 are other input parameters for assessing overheating, including prescribed occupancy profiles, internal gains and window-opening profiles.

TM59 requires designers to run simulations based on 24-hour occupancy. 'Lifestyles change – it is now reasonable to assume that people might be at home during the day, so the design needs to be fit for purpose and acceptable at all times,' says TM59 co-author and founding partner at Inkling, Susie Diamond.

The methodology is intended to be a robust test of the architecture and design, not how the building will be occupied, adds Dr Anastasia Mylona, CIBSE research manager. 'If a building passes under the conditions specified, it will thermally perform independent of occupancy profiles or, indeed, if people use the building during the day.'

Mitigation strategy

The TM urges designers to carry out noise and pollution assessments before assuming a building will be naturally ventilated. Diamond says: 'If windows need to be opened as part of the mitigation strategy, but the air quality is bad or it's a noisy neighbourhood, this could affect how the building is ventilated. The point is for designers to understand limits better, and be mindful not to contradict acousticians' recommendations.'

The methodology has been tested by a team of industry modellers, who not only tested a standardised model in IES, TAS and Energy Plus

"It has been a very encouraging process of industry coming together to produce something obviously needed in the sector"

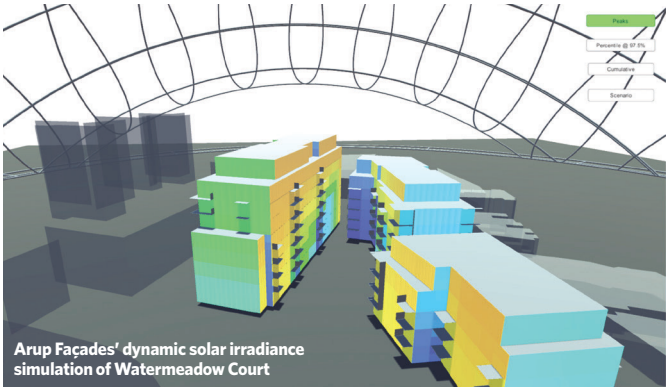

Arup Façades' dynamic solar irradiance simulation of Watermeadow Court

software, but also used it on live residential projects. Two such schemes are Arup's Watermeadow Court – a development of 219 apartments across three buildings – and Edith Summerskill House – a 20-storey tower comprising 133 social rented and affordable apartments – both being developed in a joint venture between Stanhope and the London Borough of Hammersmith and Fulham. An initial research project to investigate and develop a consistent methodology for overheating was funded by Arup and Stanhope, which supported the testing of its residential projects during the development of TM59.

After carrying out tests on a sample of Watermeadow Court flats, Arup found that the quantity of glazing on certain façades needed adjusting to help reduce overheating. 'We proposed a few alterations that wouldn't change the architectural intent, but would improve the worst performing flats,' says Chris Eliades, mechanical engineer at Arup.

This involved introducing more solid elements on the façade to reduce glazing areas, as well as using side-hung – instead of top-hung – windows and doors to maximise the openable area and improve ventilation. They also agreed – with both architects Darling Associates and daylighting consultants – different g-values to achieve a good balance between daylight and solar gains.

Additional measures included: highly insulated pipework in corridors; insulated heat interface units; ventilated utility cupboards; LED lighting; and installing mechanical ventilation heat recovery units, with summer bypass and boost mode, to increase the ventilation rate when required.

Despite being mechanically ventilated, the development was tested as a free-running building with positive results. West-facing, single aspect and some top-floor apartments showed a higher risk of overheating.

At Edith Summerskill House, the façade orientation was carefully thought through by architects Henley Halebrown, which had created dual aspect apartments with corner living spaces.

Eliades says, following Arup's intervention, side-hung windows with Juliet balconies were incorporated, achieving a 33% 'openable' glazing area, while internal blinds were included on large, fixed window panes.

Both projects show that TM59 allows designers to achieve an improved design, even in central London. 'It makes you think of all the different aspects affecting overheating at the early design stage,' he says.

He says the architects, on both projects, were amenable to altering their designs. 'If you highlight the problem and offer a solution – without changing the overall design intent – they are not opposed to it.'

But it's important to do this at the early design stage – before the architects have finalised their drawings, says Marguerita Chorafa, principal building physics engineer at Aecom. 'At that stage, you can still influence the design and help the architects improve the façade, orientation or general layout of the development but, if the building has been submitted for planning, the façade is fixed, so shutters or other external shading devices are harder to adopt.'

Chorafa says the Greater London Authority is currently reviewing its guidance, with a view to adopting TM59 methodology into its energy planning guidance. Other local authorities are expected to follow suit.

The team of modellers will now collate its results from applying TM59 on new projects and come up with rules of thumb for aspects of design that could help prevent overheating.

There's also scope for MVHR manufacturers to improve product ventilation rates without creating excessive noise, and to create efficient bypasses, says Diamond, while window manufacturers may find new solutions for flexible openings that are more acoustically attenuated.

Mylona says: 'It has been a very encouraging process of industry coming together and volunteering time to produce something that was obviously needed in the sector.'

The guidance is timely. In 2017, we have had hotter temperatures than CIBSE's 'extreme' 1976 weather file, and this trend is set to continue. 'Although the 1989 weather file – which TM59 recommends for London – is a robust test, this summer reminds us that it can get warmer, so testing more extreme weather files to mitigate future climate is something designers must consider more and more,' says Chorafa. CJ

TM59 can be downloaded for free at **cibse.org/knowledge** For details of CIBSE's new weather data sets visit **cibse.org/weatherdata**

SHADING IS KEY

A key aspect in TM59 is the use of blinds. If they are part of the mitigation strategy, they must be allowed for in the model, and then installed. 'Designers might be using shading in their calculations at the design stage but – if the developer fails to incorporate shading devices – it makes a huge difference as to how the building will perform in a heatwave,' says Mylona.

The kind of blinds used must also be specified, adds Diamond. 'They must then be paid for, and installed, because owners might not put them in.'

The overheating report must also produce dynamic modelling results both with and without blinds, indicating how significant they are in generating a 'pass' result.

TOTEM CHP at Killelea Care Home

Adveco Ltd. recently supplied equipment for the heating and hot water system at Killelea House, a newly built high-dependency care home in Bury, Greater Manchester. Included within the system is the Adveco TOTEM T10 m-CHP, a micro-cogenerator with certified high efficiency and ultra-low emissions.

Situated in Brandlesholme Road, Bury, the new care home provides residence and support for up to 36 occupants, and includes a commercial kitchen among its amenities.

The system was installed by C.M. Oxendale Ltd. of Blackburn, and designed by DBD Solutions on behalf of Bury Council. By using cogeneration at the core of the heating and hot water installation, the energy efficiency of the building is maximised in a practical and cost-effective manner.

The Adveco TOTEM T10 CHP was supplied along with a 1000-litre Adveco MSS buffer vessel, and serves to pre-heat the building's primary return water as part of the care home's heating and DHW system. Due to the nature of the business, there is a continual energy demand for water and heating, as well as a steady background electricity draw which makes the application ideal for small scale CHP integration.

The TOTEM has been designed to deliver lasting cogeneration efficiency and performance, maximising the customer's return on investment in a highly reliable system. All components of the appliance are fully replaceable to ensure that the TOTEM has no fixed lifetime, and with its automatic self-change oil system, the maintenance demand on the engine is reduced without compromising the machine's performance. Furthermore, Adveco Ltd. offer a range of complete servicing and maintenance options designed to guarantee that the CHP's high efficiency is sustained throughout the length of the contract.

Adveco Ltd. is the sister company to Adveco (AWP) Ltd., who trade as A.O. Smith Water Heaters in the UK through a partnership lasting over 45 years. By branching out to provide an increased

product offering, Adveco supply complete heating and hot water systems with fully bespoke design and high efficiency, low-carbon technologies.

Adveco Ltd, Unit 7&8 Armstrong Mall, Southwood Business Park, Farnborough, Hampshire GU14 0NR

- **01252 551 540**
- **enquiries@adveco.co**
- **www.adveco.co**

New system will control facility and its assets

Data informs decisions at London eye hospital

Real-time location systems technology tracks staff and assets

Schneider Electric's real-time location systems technology (RTLS) has been installed at Europe's largest centre for ophthalmic treatment.

In a drive to modernise its ageing infrastructure, London's Moorfields Eye Hospital invested in the EcoStruxure for Healthcare system, featuring RTLS technology to track staff, patients, and critical assets at the premises, as well as monitor patient flows.

Founded in 1805, Moorfields employs 1,800 staff who treat thousands of patients each year. As the oldest and largest centre for ophthalmic treatment, teaching and research in Europe, the facilities managers (FMs) must ensure they have the required level of insight and control over their facility.

The platform helps make the best of the hospital's existing infrastructure by integrating the older, but valuable, building systems into one comprehensive platform.

The Internet of Things-enabled system helps FMs translate data into actionable intelligence to make better business decisions. By having full visibility into the infrastructure, they can monitor and report when aspects of the building are outside health and safety compliance.

Chris Harding, director of estates and facilities at Moorfields, said: 'We've spent fewer man hours maintaining the system and my opex costs have gone down.'

NG Bailey appointed principal contractor on NHS trust project

NG Bailey has been appointed principal contractor by North Tees and Hartlepool NHS Foundation Trust to construct a new energy centre at the University Hospital of North Tees.

The £14m energy centre sits within the busy existing hospital estate and will house a new primary intake substation.

It will include: N+1 emergency generators; combined heat and power; boiler plant and associated 30m-high flue stacks; oil fuel storage and distribution; water storage; as well as associated mechanical and electrical infrastructure.

NG Bailey developed a detailed methodology showing how the critical services will be maintained throughout the build phase, as well as the commissioning and switchover protocol to transfer from the ageing infrastructure network to the new sub-stations.

As part of its principal contractor role, the firm will also be responsible for delivering building works, including the superstructure and forming the major energy centre building complex. Two reinforced concrete below-ground walkways will also be created, linking the new energy centre to the existing hospital infrastructure.

The appointment follows NG Bailey's existing project – delivery of a major upgrade to the electrical infrastructure through the replacement of the HV network cabling and the creation of three new sub-stations comprising HV/LV switchgear in closed ring configuration. The project to construct the new energy centre started on site in June.

Lighting control promotes health

To promote health and wellbeing at the Seinäjoki Central Hospital, in Finland, Helvar has designed a functional, yet calming, environment to promote patient wellbeing.

The lighting design has been carried out as part of a wider renovation project, which started in 2007. Now, 20 departments have been finished, with the renovation due to be completed in 2025.

Lighting control technology has been installed throughout the building to meet the daily work demands of staff.

Routers – linked via the hospital's IP-network – connect data signals from the lighting, and are controlled by a building management system, which saves energy costs while ensuring the facilities team can easily manage, adjust and maintain the systems. The installation is also fully scalable.

Passive infrared sensors in offices and corridors complement the LED luminaires. This not only controls the light output, but also contributes to significant energy savings in unoccupied areas.

The procedures in both the intensive care units and recovery room were carefully analysed to determine the best design for a more peaceful and calming lighting scheme.

Thanks to dynamic lighting, the colour and brightness can be adjusted to suit the time of day. Night and day variations support the care work carried out by the staff and the recovery of the patients, says Teemu Pirttinen, from the hospital's technical department.

Hospital staff are trained to use the control system to ensure lighting suits a variety of needs, including medical examinations, and where dim spaces and non-reflective light fixtures are required.

Control system ensures lighting suits variety of requirements

Academy

The ideal replacement for traditional fluorescent lighting

Energy efficient surface or suspended LED luminaire
Ideal for **educational applications**
Offers **50,000 hours operational life** with no maintenance
Quick and easy to install with opal prisms for reduced glare
Substantial energy & CO_2 savings vs fluorescent fittings
Digital dimmable, **integral sensors** and emergency variants

LED

Long life LED luminaires

Contact Luceco on
(01952) 238 100

LUCECO
LIGHTING POSSIBILITIES
www.luceco.com

SUCCESSFUL OPERATION

A retrofitted BIM model can transform the way maintenance is planned and undertaken. BAM's **Phil Palmer** explains how the contractor used BIM at Wharfedale Hospital in Leeds

BAM started work on the new Wharfedale Hospital in 2002. The 9,500m², 76-bed facility, which replaced an outdated Victorian hospital, comprises an endoscopy suite, minor injuries, outpatient, physiotherapy, pathology and radiotherapy departments, and two operating theatres.

Built around a quadrangle, the three/four storey hospital is designed as a patient-friendly building that is easy to navigate. The private finance initiative (PFI) project was delivered by BAM PPP which, in-conjunction with BAM Construction and BAM FM, built and now maintain the hospital.

BAM developed its initial building information modelling (BIM) for the FM solution at UCL Academy in Camden, London, where we digitised operation and maintenance (O&M) information – such as manuals, drawings and plans – and linked it to the BIM model. This enabled the FM team to access the most current data via an iPad, and update it in real time as work was undertaken.

At Wharfedale, we saw an opportunity to develop our approach further and assist the hospital to address some of the operations-related challenges it faced.

Retro BIM modelling Wharfedale

Retrospective BIM was used to develop an operational 3D FM model of the hospital, containing more than 4,000 assets that require servicing and maintenance. During the development of the retro model, a major consideration was the building's services and their related components and systems.

The BIM team was given a unique insight into the factors that were most important for the hospital's operations through our discussions with BAM FM's staff and, as a result, we identified three main focus areas:

- Prevention of scalding from hot water
- The need to locate all fire dampers and their access, which was hard to identify on the paper plans
- The ability to record planned preventative asset maintenance.

Our team modelled the associated 'asset types' for each issue; they were checked and verified using the existing 2D record drawings. Each major service asset was then classified using Uniclass 2, which meets the requirements for Level 2 BIM.

The data contained within the model is easily accessible using BIM360Field on an iPad, putting FM information at the users' fingertips. This has improved the accuracy of data and cut the time for undertaking tasks.

The success of this approach was seen very early on in the project »

> "During the development of the retro model, a major consideration was the building's services"

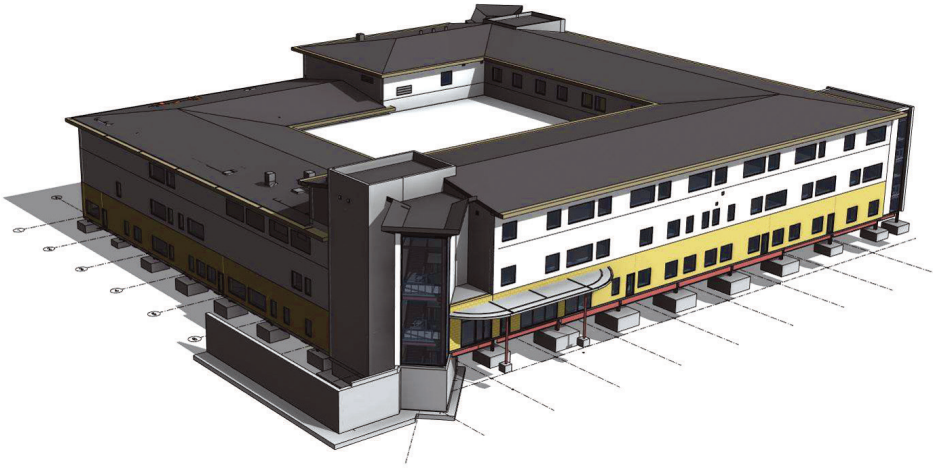

"The data contained within the model is easily accessible using an iPad, putting FM information at the users' fingertips"

» when – during a fire inspection – we were able to use the model to quickly locate and provide information on all smoke and fire dampers in the hospital.

Recently, we have added additional data to the model to meet the needs of the NHS Trust. This included the creation of essential electrical distribution drawings, which highlight electrical cupboards and the areas they serve, making it easier to carry out electrical work.

FM efficiency

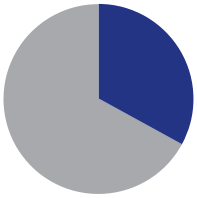

33% quicker

FMs are now able to carry out 60 room surveys in two hours – a third faster than the manual way

Addressing Wharfedale's operational challenges

Once the model was complete, we explored how we could use it – and other technologies – to address some of the issues raised during our initial discussions with the FM team.

Recording maintenance procedures

Planned and preventative maintenance tasks are traditionally time consuming to complete, but our approach – which uses a mobile device linked to the model – has changed this.

In previous years, the annual condition survey involved the manual completion of multiple excel sheets by facilities managers. However, the survey process is now on iPad and linked to the model. This allows users to complete checklists quickly and efficiently, view previous checklists and see what work has been carried out.

To make the process even faster, we have installed barcodes in each room, which, when scanned with the iPad, take the user straight to the relevant room's condition survey and data. As a result, our FM team is now able to carry out 60 room surveys in two hours – 33% quicker than the manual way.

Preventing scalding

We have used the model to carry out regular checks to ensure that water is being supplied at below 40°C in all taps. Each valve is tagged with a QR code, and when this is scanned by a technician using a mobile device, they receive the latest information on that unit, including: the date of the last inspection, issues identified and when the next check is due. Once a new check is undertaken, data is updated automatically.

More effective work planning

Building on the work to digitise the condition survey process, we have now visualised the survey results by creating hospital floor layouts that show the condition of each room. These allow the FM team and the NHS Trust to see at a glance what work needs »

Plantroom at Wharfedale

AT A GLANCE: THE APPROACH AT WHARFEDALE

The way maintenance is planned and undertaken at Wharfedale was transformed by:

- **Creating a 3D model of the hospital containing 4,000 assets**
- **Digitising the condition survey process**
- **Using QR codes placed on assets to update information automatically within the model as checks are carried out**
- **Expanding our approach to cover building operations and provide tickets for PPM activities.**

Matched heating to match stringent environmental criteria

Hoval boilers fitted with Riello dual fuel low NOx burners have been selected by Skanska for the New Papworth Hospital in Cambridgeshire. The precise matching of boilers and burners will ensure optimum energy efficiency with low NOx emissions.

The new 310 bed hospital is being constructed on the Cambridge Biomedical campus, using Building Information Modelling (BIM) techniques, and is due for completion in 2018. With a comprehensive range of cutting-edge medical facilities it will replace the existing, and outdated, Papworth Hospital.

A key element of being specified for the project was the ability of Hoval and Riello to supply BIM-compatible product information for incorporation into the model.

Two Hoval Max-3 2.2MW boilers fitted with Riello RLS300/EV burners will be used as the lead boilers to provide space heating and hot water to the new 40,000m^2 hospital, backed up by a 530kW Max-3 boiler with RS68/EV burner.

In addition, Hoval will supply two 1,100 kg/hr TDHU steam boilers, both using Riello RLS120/EV burners.

The boiler/burner combinations specified for the project will deliver optimum performance and energy efficiency with low NOx emissions to ensure low cost of ownership and minimal environmental impact for the hospital.

The Riello RLS300 EV and RLS120 EV burners are low NOx dual fuel, while the RS68 EV is gas only. All of the burners incorporate inverter driven fan motors and full electronic control, with an interface that provides real time information for the end user.

Hoval Max-3 boilers have a three-pass design to deliver net efficiencies to 95.2%, The TDHU steam boiler also uses a three-pass design, combined with a big flame tube and a large water capacity to ensure long burner run times for enhanced efficiency.

Hoval Max-3 boilers range in outputs from 420kW to 2,700kW and the three-pass design features dimpled tubes on the third pass for enhanced heat exchange. They are available for heating-only applications for medium to large commercial building and are suitable for both new build and replacement projects. The maximum operating temperature is 105deg.C and the maximum working pressure is 6 bar.

www.hoval.co.uk

IAN DAGLEY is sales director with Hoval and has been with the company since 2005. During this time he has played a key role in broadening the company's offering to include low carbon heating, heat recovery and ventilation products, in addition to Hoval's traditional high efficiency boilers

» to be undertaken over a five-year period, and to schedule these activities so that they cause minimum disruption to the hospital's daily operations.

Currently, the layouts are paper based, but we are working to place this information within the BIM model so the client will have all the information they need at their fingertips, while being confident they are seeing the latest version.

BAM PPP is also using the layouts in its discussions with its funders, who need to see work plans before releasing funds. The diagrams provide the team with a visual tool that is quick to explain and easy to understand, helping them secure the money they need.

As a visual aid, the condition survey drawings linking back into the BIM model are far more valuable to clients and the banks, allowing them easily to see the high-priority areas and understand that our life-cycle replacement choices are based on sound evidence and a forward-looking plan of works.

Saving energy and money using latest technologies

The FM team is continually looking for ways to keep the building's energy consumption at a minimum, while maintaining a safe and clean environment for patients and staff.

We have helped the hospital to cut electricity use in its operating theatres by 28% by shutting down the heating, ventilation and air conditioning systems when the theatres are not in use.

Sensors were fitted to reduce ventilation by 50% when the theatre was unoccupied for one hour, and shut down completely at night and over the weekends. A quick restart sequence was programmed into the building management system to switch on the ventilation in case of emergency.

These changes have resulted in annual electricity savings of more than 13,600kWh and more than six tonnes of CO_2 emissions. CJ

28%

The reduction of electricity use in operating theatres

PHIL PALMER is virtual construction manager at BAM Construct UK

"The diagrams give the team a visual tool that is quick to explain and easy to understand"

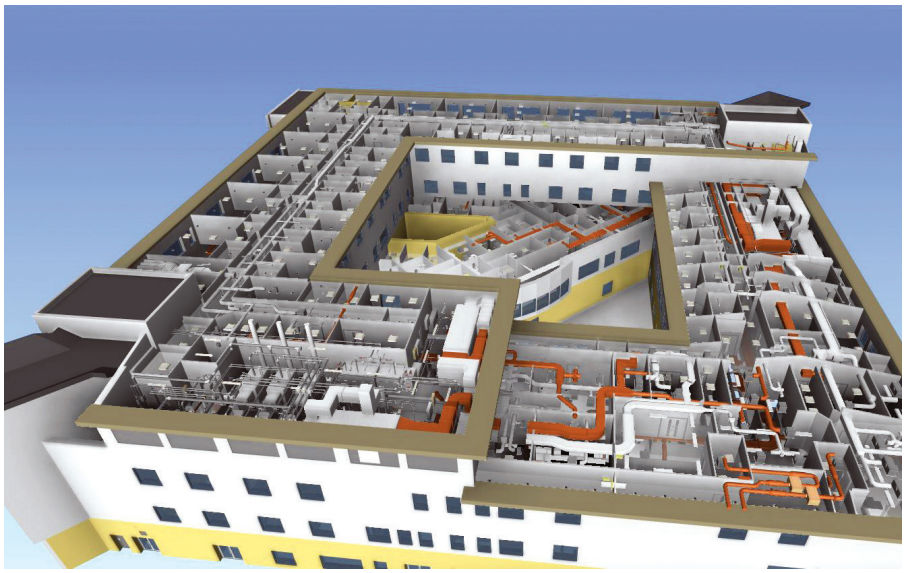

DIVINE INTERVENTION

Electrical heaters had to be replaced at an 18th century church in Cumbria, because of draughts and condensation. **John Hiley** explains how a 14kW air source heat pump and underfloor heating delivered the required conditions

Running costs

10,500 kWh

Approximate average annual use before renovation

9,478 kWh

Approximate average annual use since renovation

The 1743 Grade II listed church of St Anne in Ings, Cumbria, was renovated in November 2012. The remit of the project was to create a well-heated, energy-efficient and versatile space, while maintaining the character of the building and its role in the community. An energy survey showed the benefits of installing a renewable energy source and improving insulation. The pews and under-pew electrical heating were replaced by moveable furniture, an air source heat pump (ASHP) and underfloor heating, with back-up electric radiant panel heaters.

Secondary glazing was added to the windows and loft insulation was installed, while removing the raised wooden flooring beneath the pews allowed the creation of a new insulated floor on one level.

Requirements

Prior to renovation, 12kW of under-pew electrical heaters provided the heating. The congregation was reasonably comfortable; the chancel and porch were both unheated except for portable electric heating.

Heating was not on during the week but, while the air temperature was adequate when the heating had been on for more than 24 hours before a Sunday service, the fabric of the building remained cold. Walls and windows were frequently wet with condensation and the congregation experienced uncomfortable draughts. Renovation gave an opportunity to make thermal insulation improvements: secondary glazing panels and loft insulation were installed, and the floor was dug out by 500mm to accommodate the new construction – a limecrete slab on a 300mm layer of loose-fill lightweight expanded clay aggregate (LECA) insulation.

Limecrete, a combination of natural hydraulic lime and lightweight aggregate, creates a breathable floor slab that improves the thermal performance and mitigates rising damp. Heating pipes were laid over the slab, with the floor finished in sandstone flags to best conduct heat into the building.

Heating system

The heating system delivers heating to minimise draughts, mainly to the metre or so closest to the floor where it is needed. Heat loss calculations showed that, for a 15K temperature difference between inside and outside temperatures, there would be about 15kW of losses.

A ΔT of 15K is adequate for most winter days, with heating switched on early to raise the temperature over a period of 24-36 hours.

A 14kW output ASHP was chosen as the main heating source for the system because of its manageable capital and running costs, sustainability and easy maintenance. The

water temperature can be adjusted in advance to meet heating requirements.

As backup, 13kW of radiant panel electric heaters were also installed. The thermostats and timers controlling the two heating systems ensure the heat pump does most of the work. And, except for the coldest days, the radiant panel heaters have not been needed.

The church operates on an electricity tariff with cheaper night-time and weekend rates. The ASHP, located outside, is operated at night to maintain a background air temperature of about 10°C during the week; the temperature is raised for services.

The ASHP is able to raise internal temperature to 15°C when external temperature is above 0°C. A water temperature of 45°C is a good choice for winter heating; experience shows that the heat pump is able to heat the building within 30 hours of start-up on typical winter days, when the outside temperature is 5°C.

The heat pump is most efficient when the source (air) and sink (water) temperatures are closest. The coefficient of performance (COP) is the ratio of kW (heat) out and kW (electrical) in (and, of course, higher COPs equate to lower operating costs). Figure 2 shows that for an air temperature of 0°C, COP is better when the water temperature is lowest. However, the floor output is reduced at lower water temperatures.

Table 1 shows that at 45°C, the heat output is 185W·m^{-2}, whereas at 35°C, it is only 123W·m^{-2}. So for a floor of 90m^2, 35°C water can only deliver 11kW. The output of the heat pump reduces in very cold weather, such that it may be unable to deliver the full 14kW.

As Figure 1 shows, the heat pump can only deliver 12kW at -10°C. There is an increase in the input power required at low temperatures, too, as well as for increased water temperatures, as shown in Figure 3.

The unit has a weather compensator, which adjusts the water temperature for different outside temperatures. Currently, water temperature is set manually: 45°C in winter and 30-35°C in summer.

"The project has successfully delivered an accessible, versatile, well-heated space"

Running costs

Before renovation, annual consumption varied considerably. In March 2001-02, the use was 13,500kWh, while from April 2006-07, it totalled 7,500kWh. The average annual use was about 10,500kWh (1,500 day and 9,000 night/weekend units).

Since renovation, the average annual use between November 2012 and 2016 was 9,478kWh (1,183 day and 8,295 night/weekend units), a 10% average decrease in consumption. This represents a good achievement for the heat pump, given that church use has doubled and temperature is maintained above 10°C, even in the coldest months.

There's an improved level of comfort, with the air temperature at least 17°C and the floor temperature higher still. The project has successfully delivered an accessible, versatile, well-heated space. Because church occupation has doubled and the building is kept warmer, the average annual COP is estimated to be 2.5-3.

The heating system, coupled with new thermal insulation, is economical and effective even in frosty weather. The underfloor system ensures background heat, which maintains a higher temperature in the building fabric. This has all but eliminated condensation on internal walls and draughts, making the space useable throughout the year. ASHP operation is simple and only requires minimal intelligent adjustments. CJ

JOHN HILEY had a career in high voltage engineering at Norweb and USA-based industrial electron-beam processors manufacturer Energy Sciences Inc, and taught at Heriot-Watt University, Edinburgh

References:

1 Data for 14kW Mitsubishi Ecodan air-source heat pump **heating.mitsubishielectric.co.uk**

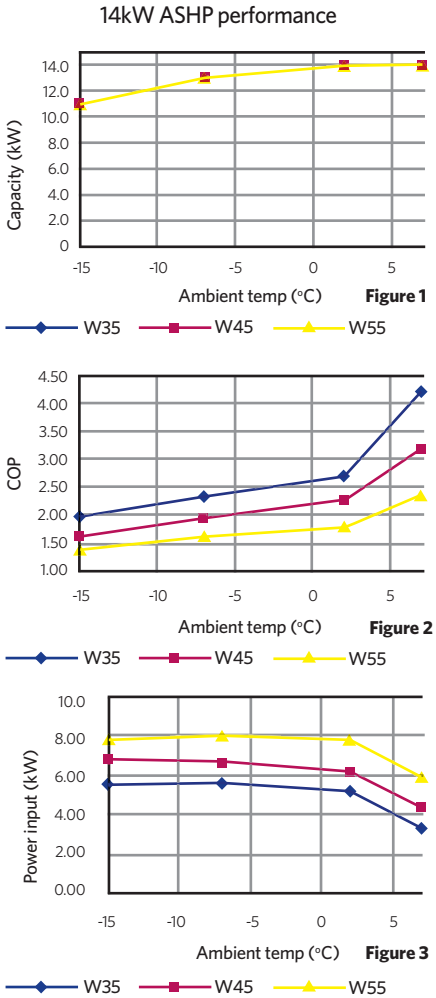

Heat pump performance data for water temperatures of 35°C, 45°C and 55°C[1]

Table 1

Water °C	QW·m^{-2}	Total kW
25	60	5.4
30	92	8.3
35	123	11
40	154	13.8
45	185	16.6

Underfloor heat output at 15°C ambient, pipe spacing 100mm

GOOD COP, BAD COP

BS EN 16147 allows considerable leeway in the setup of heat pumps for domestic hot water production, so designers should take care when comparing performance test results

The principal components of energy demand in the UK domestic sector are space heating and hot water. While modern, energy-efficient housing can reduce space-heating demand, there are few – if any – design solutions to reduce domestic hot-water demand, so it constitutes an increasing proportion of overall household energy demand.

Heat pumps are considered to be an energy-efficient way of using renewable energy to produce hot water, and have the potential to become a key measure in the reduction of carbon emissions from domestic energy use.

The performance testing of heat pumps for space-heating applications is well established and there is a substantial body of test and field data defining heat pump space-heating efficiency – but the testing of heat pumps for domestic hot water (DHW) to BS EN 16147 is relatively recent.

BRE has invested in upgrading its test chambers to carry out these tests and, over the past two years, has been examining DHW heat pumps.

The performance test on a hot-water heat pump is carried out on a complete system, consisting of a heat pump and storage cylinder. The resulting coefficient of performance (COP) is the ratio of the energy in the hot water drawn from the cylinder, in a tapping cycle specified over a 24-hour period, to the electrical energy supplied to the heat pump over the same period. As this COP is net of any heat losses in the storage cylinder – and the heat pump is operating at the higher end of the water temperature range, between 50°C and 60°C – it is expected that the DHW COP of a heat pump will be considerably lower than the COP (or seasonal COP, sCOP) for space heating.

Extensive testing of heat pumps for DHW production has highlighted the fact that the test standard allows considerable leeway in the setup of the heat pump. This means that system designers need to proceed with caution when comparing different DHW heat-pump test results.

It is also clear that the overall performance of the DHW system is very much dependent on the relationship between the heat pump and the cylinder. This relates not only to parameters such as the U-value and the coil area, but also to the location of the temperature sensors, the heat pump operating parameters, and several other details. **CJ**

ALAN ABELA, Environmental Technology Group, Building Research Establishment (BRE), Watford. Contact: **Alan.Abela@bre.co.uk**

EVOLUTION IS HERE

GAS 220 ACE

OUTPUT AND EFFICIENCY

- Pioneering high output to size ratio.
- Highly efficient 97.7% GCV. Ultra-low NO_X.
- Reduced gas consumption for market leading energy and cost savings.

EASE OF CONNECTION

- All connections and pipework enter into the top of the boiler.
- Side-by-side and back-to-back positioning enables a very large output in a small space.
- Fits through a standard door.
- Inbuilt flue non-return valve so multiple units can be flued together.

EASE OF USE

- It's lightweight and with integral wheels making it easy to manoeuvre.
- LED illuminated casing air box, aids servicing in plant room.
- Delivered on a pallet with a built-in ramp making it easy to offload.

gas220ace.co.uk

remeha

7 reasons flexoTHERM

is the smartest heat pump system you can install

up to
5.91
SCoP

A+++*
High efficiency, low consumption

Flexible sources

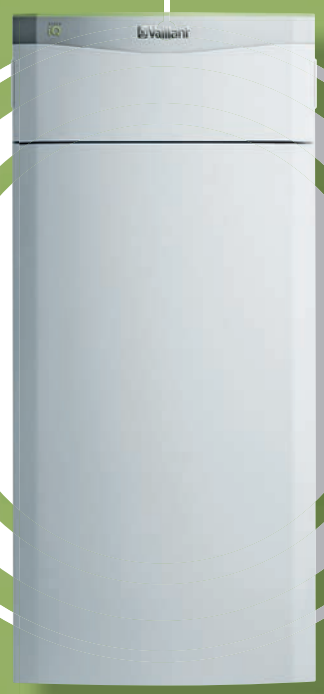

Easy installation

Q
43dBA
Super quiet at 43dBA

140
Over 140 years of expert German engineering

Sustainable thermal energy

Energy with intelligence: the heat pump of the future.

Embodying our unique Green iQ values, flexoTHERM is our greenest heating system yet, attaining the highest energy efficiency label in its class - ErP rating A+++*.

flexoTHERM heat pumps draw thermal energy from renewable natural sources such as the air, ground or water to efficiently heat buildings and generate hot water with much lower running costs and carbon emissions.

In a world where sustainability is increasingly important, a flexoTHERM system is easy to install and helps your customers reduce fuel costs while providing greater comfort and convenience than ever before.

See the way forward in heating. Visit www.vaillant.co.uk or telephone 0345 602 2922

*when used in conjunction with the VRC 700 control

Featuring

GREEN iQ

Technology

vaillantuk
vaillantuk
vaillantuk

QUIET MARK quietmark.com

ErP A+++

■ Heating ■ Hot water ■ Renewables

Because Vaillant thinks ahead

CIBSE CPD

Continuing professional development (CPD) is the regular maintenance, improvement and broadening of your knowledge and skills, to maintain professional competence. It is a requirement of CIBSE and other professional bodies.

This *Journal* CPD programme can be used to meet your CPD requirements. Study the module and answer the questions on the final page. Each successfully completed module is equivalent to 1.5 hours of CPD.

Modules are also available at **www.cibsejournal.com/cpd**

Employing distributed mini heat pumps with a shared ground loop in social housing

This module explores how the use of mini heat pumps by apartments in social housing schemes that share a common ground loop can be an effective way of reducing carbon output and cutting energy costs

The social housing sector in the UK currently operates an estimated 2.25 million flats. As well as the fabric requiring attention, many of these have heating systems that would benefit from more effective heat sources.

This CPD article will consider the application of distributed mini heat pumps that share a common ground loop as a means of reducing operational carbon impact – and cost – as part of the holistic improvement of this vital housing stock.

In any refurbishment project, the essential first stage – following appropriate surveys and life-cycle cost benefit analysis – is to ensure that the building fabric is refurbished to provide an appropriate thermal, and environmental, performance. As well as considering the cold weather performance of the building, it is increasingly important to establish that the building alterations minimise the potential for overheating. (A methodology to examine this is provided in the recently published CIBSE Technical Manual 59 *Design methodology for the assessment of overheating risk in homes*.) A typical prioritised order for undertaking remedial measures in housing is illustrated in Figure 1.

In parallel with planning the fabric improvements, the environmental (heating and possibly cooling), water and public health systems – as well as other installed systems – would be evaluated. It is, in any case, good practice to consider the whole integrated building system when determining the optimum solution. Not understanding the impact of all the system's components can, for example, lead to costly additional building work or – worse still – unintended consequences, such as penetrations through vapour barriers, rain shields and fire barriers.

Potential options for the heating systems are numerous and include sourcing 'renewable' heat; district heating; upgrading existing systems; and improving controls. Existing installed systems should be thoroughly assessed to establish the practical viability of upgrading the systems to meet – and potentially exceed – current standards. This could be through equipment refurbishment – such as new heat exchangers, improved heat emitters, valves, sensors and controls – or simply by methodical recommissioning.

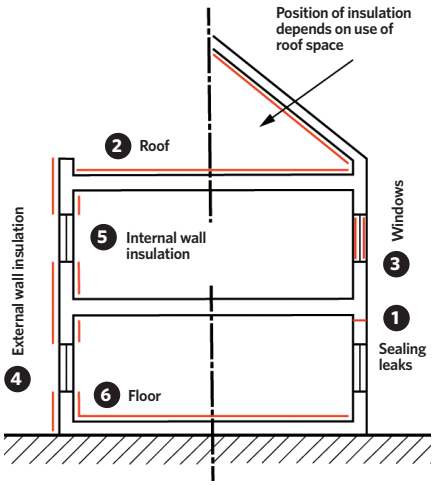

Figure 1: Typical prioritised sequence for remedial measures to improve thermal performance of the building envelope (Source: CIBSE TM53[1])

The selected solution will be determined by: specific factors that relate to the building type and use; level of user engagement; the availability, cost and environmental impact of energy; system operational characteristics; »

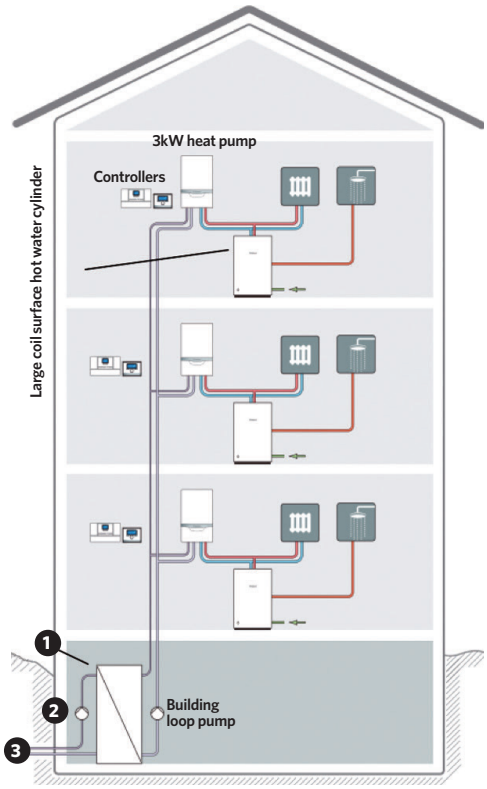

1 Plate heat exchanger to allow hydraulic separation between the ground loop and the building loop
2 Ground loop pump
3 To and from ground loop

Figure 2: Schematic of system (Source: Vaillant)

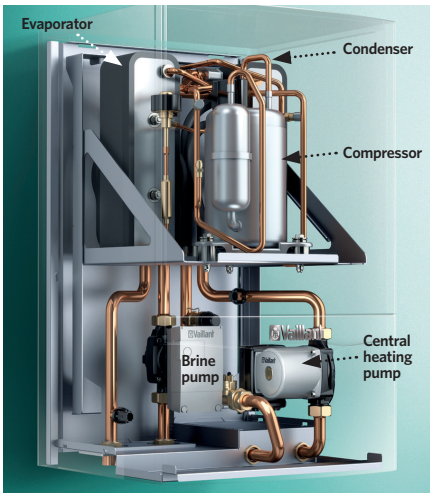

Figure 3: Cutaway of a commercially available 3kW wall-hung heat pump (Source: Vaillant)

» monitoring needs; and maintenance requirements.

This article will focus on a relatively innovative solution that employs distributed micro heat pump systems, which draw heat from a shared ground loop and are located in individual apartments that have good thermal performance (typically through refurbishment), as illustrated in Figure 2. This concept has been made possible through the recent development of wall-hung mini heat pumps that can be used to provide heat for space heating and domestic hot water (DHW).

An example of a wall-hung 3kW mini heat pump is shown in Figure 3. This is driven by an almost-silent rotary vane (rolling piston, fixed vane) compressor (see boxout). The evaporator of this vapour compression system draws heat from the ground via the circulation of 'brine' through a ground loop and an internal building riser loop. The circulating fluid used in the closed-loop ground heat exchanger is usually water with antifreeze (commonly ethylene glycol and propylene glycol) added to provide protection from freezing, plus inhibitors to prevent corrosion and bacterial growth. This offers freeze protection down to at least -15°C.[2]

The ground temperature seasonally fluctuates to depths of about 15m where the temperature is approximately equal to the mean annual air temperature (8-11°C in the UK). Below this, the ground temperature increases at, on average, 2.6°C per 100m because of heat flowing from the interior of the Earth. Mean temperatures at 100m depth in the UK vary between about 7°C and 15°C. Hence, in winter, the ground temperature is higher than the air temperature, while in summer, it is lower than the air temperature.[3] Careful site assessment is required to determine an appropriate ground loop design and, particularly where bore holes are being considered, the input of specialist geologists. A diversity factor would not normally be used when sizing the ground loop or the main riser pipe, and so both should be of a suitable size to deliver the required heat when all the heat pumps are operational.

A high-effectiveness, low-pressure loss plate heat exchanger is typically required between the ground array and the internal building riser loop, to provide a hydraulic break. The internal riser must be sized to support all heat pumps running at the same time – the heat pumps may have specific pressure limitations that influence the riser design. Circulation pumps will be required for the ground array as well as for the internal riser, and both these will need to be sized for full flow requirements – careful system design is important to ensure effective hydronic operation. Since the circulating fluid is likely to be below the dew-point temperature of the surrounding air in the riser, proper insulation and vapour barriers are essential.

The tenant maintains control of the heating and hot water, and pays for it through their normal electricity supply bill. This could provide opportunities for more responsible use of energy. However, compared with a centrally supplied, fixed-rate heating system, there may be a risk of tenants maintaining unhealthily cold conditions because of fuel poverty (despite the actual operational cost being lower than with the old systems). The heat is generated and used in the immediate occupied area, so no heat is lost transporting it around the building –contributing to the reduced operating costs.

Since the system is driven by electricity, there are zero emissions at the point of use. This can be particularly attractive in helping to improve air quality in cities. In

ROTARY VANE COMPRESSOR

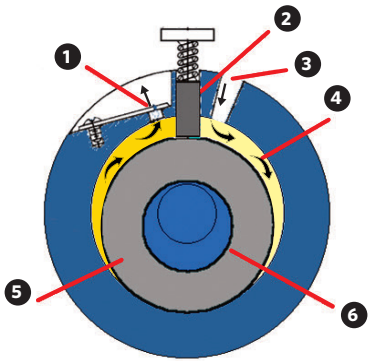

1 Discharge valve and discharge port
2 Sprung vane slides in and out as eccentrically mounted roller piston rotates
3 Suction port
4 Low pressure, low temperature refrigerant gas
5 Rolling piston rotates around eccentric cam as shaft rotates
6 Compressor shaft fixed to eccentric cam. The shaft is direct driven from the rotor of an integral motor

This type of compressor (illustrated left) is typically found in domestic refrigerating machines and comprises a rotating shaft connected to an eccentrically mounted roller. It is a positive displacement device but, unlike a reciprocating compressor, the continuous rotary action is not subject to impulsive vibration – the machine also has very few moving parts. A single vane – or blade – is spring-mounted in the non-rotating cylindrical block. The rotating motion of the roller causes a reciprocating motion of the sprung vane, so providing a separation between the incoming cool low-pressure refrigerant gas and the higher pressure, higher temperature leaving refrigerant.

Figure 4: Schematic of a rotary vane compressor driven by integral two-pole motor that rotates at 2,850rpm (with a 50Hz electrical supply)

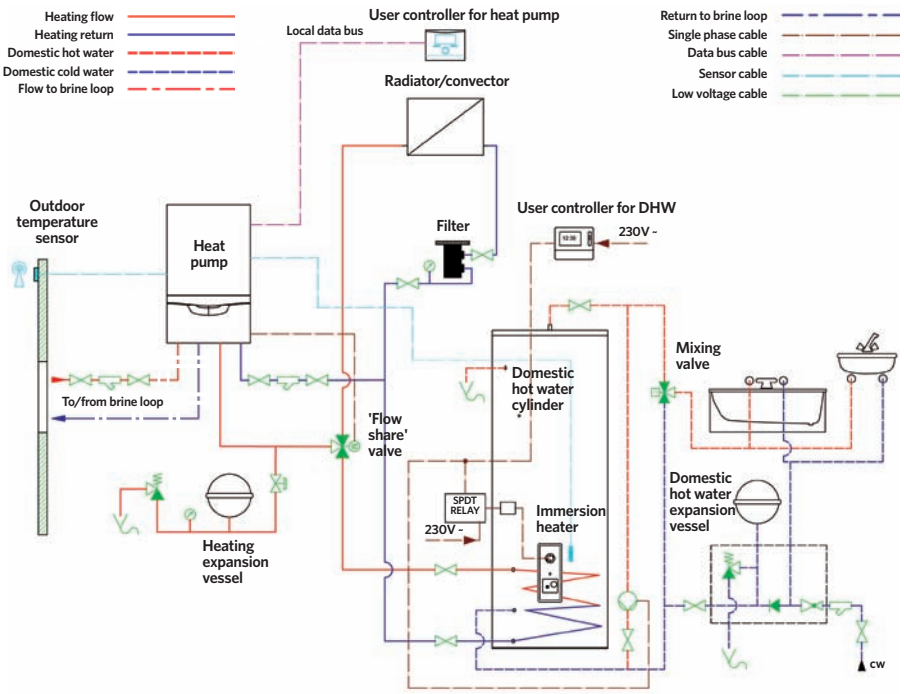

Figure 5: Schematic of typical installation in flat (Source: Vaillant)

the UK, the operator benefits from the commercial renewable heat incentive (RHI) over 20 years (subject to individual apartments maintaining an up-to-date energy performance certificate (EPC)), giving the landlord a confirmed income stream that can be used – among other things – to offset the pumping and maintenance costs. (This is subject to the rules as published by Ofgem – see **www.ofgem.gov.uk**.)

UK 16-floor residential tower block example application

A generic 16-floor, 95-apartment southern England lightweight concrete tower block that was originally completed in the mid 1960s, with an average apartment size of 50m², is used as an example. The building is currently served with an oil-fired heating scheme. A model has been created by the heat pump manufacturer to explore the opportunity to apply distributed mini heat pumps to serve the needs of the tenants as part of an integrated building refurbishment.

The load assessment confirmed that each flat could potentially be serviced by its own 3kW wall-hung R410a heat pump and DHW cylinder. The low-grade heat from a ground-sourced building loop is sufficient to deliver flow water temperatures of up to 60°C from the heat pump (the coefficient of performance (COP) of the heat pump will reduce as the output temperature rises; however, even at 60°C, the COP is approximately 2.5). This is then used to heat the apartment through oversized radiators and to produce DHW through a 150L 'heat pump' unvented cylinder (this has a larger coil than traditional hot water cylinders).

An example system, to serve a typical two-bedroom apartment of 60-70m² (as shown schematically in Figure 5), was modelled with an annual heating requirement of 7,115kWh and a DHW heating requirement of 2,292kWh.

The ground array was sized to deliver brine to the heat pumps at a temperature of between 0°C and 8°C. The total length of borehole depends on the specific ground conditions, as this affects the opportunity for heat transfer. As an example, if the ground provided a relatively modest 38W per metre of borehole, then 4,500m of borehole will be required – this could be provided by 33 boreholes, each 130m deep. (Operating for 2,400 hours per annum, BS EN 15450[4] indicates that a borehole in dry sediment can provide 20W per metre, and that 'normal' underground and water-saturated sediment can provide 50W per metre.) A sketch of a ground loop for a site like this tower block is shown in Figure 6.

Considering the required heating temperature and predicted range of borehole extraction temperatures, the seasonal heating COP (SCOP) of the 3kW heat pump is 3.7 and so the heating annual electrical requirement is 1,922kWh. To provide DHW at an appropriate temperature, the average COP was estimated as 2.8 and so the annual electrical energy requirement is 818kWh. The total annual energy requirement is 2,740kWh – so, based on an electrical cost of 13p per kWh, the estimated annual fuel cost is £356.20 per apartment.

The notional basic carbon saving of producing heat for the apartments can be estimated based on the annual heat requirement of 583,989kWh. Assuming the efficiency of the existing oil plant room is 75%, the annual carbon emission is approximately 210 tonnes[5] CO_2. This compares with the heat pumps that have an overall SCOP of 3.47 (taking account of a reduced COP to meet the DHW needs) generating approximately 69 tonnes[5] CO_2. So, notionally, the distributed mini pump system would save more than 140 tonnes CO_2 each year, in addition to removing local pollutants that are otherwise emitted from the oil burning plant.

The potential RHI – which is payable over 20 years – is split into two annual tiers, with the first 1,314 operational hours paid at £0.0895 per delivered kWh heat and the remaining at £0.0267 per delivered kWh heat. The total annual heat requirement for the building has been calculated as 583,989kWh. If supported by metered consumption (which would be feasible since all the mini heat pumps are equipped with heat meters and networking capability), the RHI payment could provide an annual payment of £36,469 (if tenants were to use the systems under the conditions modelled).

Turn to page 50 for further reading and references.

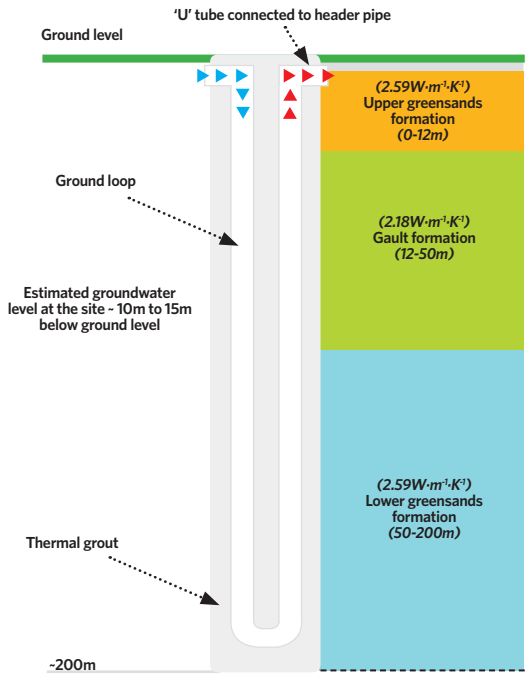

Figure 6: Example of ground loop penetrating different strata (Source: Vaillant/Carbon Zero Consulting)

» Module 114

August 2017

1. Which CIBSE TM provides a design methodology to minimise overheating in homes?

- ☐ A TM51
- ☐ B TM53
- ☐ C TM55
- ☐ D TM59
- ☐ E TM60

2. In the schematic of the system (Figure 2), which of these components is included in the landlord-controlled basement area?

- ☐ A Brine loop pumps
- ☐ B Control panel for apartment heating and hot water
- ☐ C Domestic hot water cylinder
- ☐ D Heat pump condenser
- ☐ E Heat pump evaporator

3. In the UK, what is more likely to be true for the mean temperature of the ground at a depth of 100m?

- ☐ A Almost always 2.6°C
- ☐ B Always lower than the air temperature
- ☐ C Always warmer than the air temperature
- ☐ D In the range 7–15°C
- ☐ E In the range 8–11°C

4. In the tower block example, what was the maximum temperature of the water that could be delivered from the mini heat pump?

- ☐ A 40°C
- ☐ B 45°C
- ☐ C 55°C
- ☐ D 60°C
- ☐ E 65°C

5. Notionally, how much CO_2 could be saved annually in the example building when using the mini heat pump system as the source of heat, compared with the original oil-fired boilers?

- ☐ A 10 tonnes CO_2 per year
- ☐ B 40 tonnes CO_2 per year
- ☐ C 80 tonnes CO_2 per year
- ☐ D 110 tonnes CO_2 per year
- ☐ E 140 tonnes CO_2 per year

Name (please print) .....

Job title .....

Organisation .....

Address .....

.....

.....

Postcode .....

Email .....

Are you a member of CIBSE? If so, please state your membership number: .....

The *CIBSE Journal* CPD Programme

If you do NOT want to receive information about Vaillant, the sponsor of this CPD module, please tick here: ☐

By entering your details above, you agree that CIBSE may contact you with information about CPD and other training or professional development programmes, and about membership of CIBSE, if you are not a member.

Go to **www.cibsejournal.com/cpd** to complete this questionnaire online. You will receive notification by email of successful completion, which can be used to validate your CPD records. Alternatively, fill in this page and post it to: **N Hurley, CIBSE, 222 Balham High Road, London, SW12 9BS**

Further reading:

CIBSE TM51 *Ground source heat pumps* provides a comprehensive introduction to the overall technology and application and is well complemented by BSRIA's *Heat pumps – A guidance document for designers.*

References:

1 CIBSE TM53 *Refurbishment of non-domestic buildings*, CIBSE, 2013.
2 CIBSE TM51 *Ground source heat pumps*, CIBSE, 2013.
3 **www.bgs.ac.uk/reference/gshp/gshp_report.html** – accessed 1 July 2017.
4 BS EN 15450 *Heating systems in buildings – Design of heat pump heating systems*, BSI 2007.
5 Based on data from **www.gov.uk/government/publications/greenhouse-gas-reporting-conversion-factors-2016** – accessed 1 July 2017.

New CIBSE Training Programme

September – December 2017

CIBSE

Build confidence and competence with CIBSE Training

Find the right training for you:

- Energy Assessor Training
- Facilities Management
- Water Services & Public Health
- Lighting
- Fire Safety
- Energy Efficiency
- Mechanical Services
- Building Regulations
- Electrical Services

10% off* using discount code: **JOURNAL17**

Book online at: www.cibse.org/training

Alternatively, CIBSE can provide in-house training delivered directly to you.
Training multiple staff at once is the most cost effective way to develop employee skills at your organisation. All CIBSE Training courses can be delivered directly to you and your team at preferential rates**.

Simply email training@cibse.org quoting "JOURNAL AUGUST" for more information.

*Offer expires on 30 September 2017. This offer can be used on both member and standard ticket rates but not in addition to any other discount offers.
**In-house courses are only available in the UK and Europe with a minimum of 6 delegates per course.

PRODUCTS & SERVICES

Underfloor air conditioning fits the bill at 8 Waterloo Place

Recently, 8 Waterloo Place has been fully refurbished, including structural reconfiguration to the central core and installation of new HVAC services, creating 33,000ft^2 of prime speculative office space in London's St James' area. AET Flexible Space supplied a CAM-C direct expansion underfloor air conditioning system, comprising 8 CAM-C 35 downflow units, Daikin heat pumps and approximately 108 TU4-EC fantiles.

Call 01342 310 400 or email aet@flexiblespace.com

Safeguard's Drybase Flex provides sheet barrier to damp

Safeguard's Drybase damp-proof coatings range offers practical solutions and applications when it is difficult to create or reinstate damp-proof courses or tackle penetrating damp because of, for example, access issues. A watertight, low-profile sheet membrane solution for persistent damp, Drybase Flex membrane is a durable and flexible means of protection against moisture ingress. It can be applied to walls using specially-formulated Drybase Flex adhesive.

Call 01403 210 204

A five-star BIM performance from Grundfos

Grundfos Pumps has invested in creating purpose-built BIM assets from scratch to ensure they do not contain unnecessary data. This investment proved worthwhile when the firm was advised it was the first supplier to be awarded five stars for the supply of 3D models and BIM data by GMS.

GMS supplies a wide portfolio of products for a diverse range of applications. This includes the recent supply of 10 calorifier packages, that incorporate Grundfos pumps. These will make up four different heat stations for a £150m project that is part of a new building extension to the Royal Hospital for Sick Children in Edinburgh.

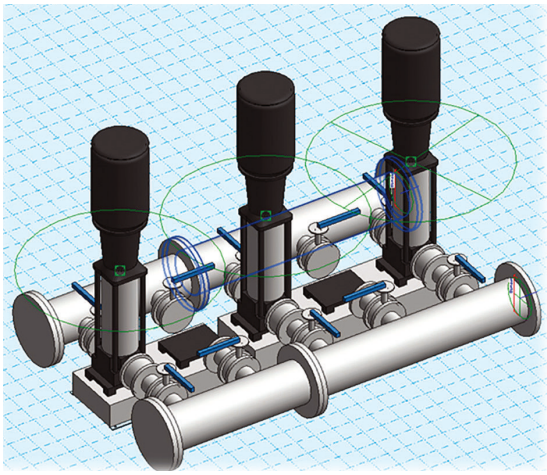

This project is a great example of BIM in practice; Grundfos and GMS worked together to deliver the best solution by using this intelligent 3D model-based process that has made a difference to the efficient planning, design, construction, and management of building projects.

Call 01525 850 000, email grundfosuk@grundfos.com or visit www.grundfos.co.uk

Planning in principle submitted for new Scottish prison featuring BakerHicks' designs

BakerHicks has completed its part in the submission for planning permission in principle to Highland Council to build the first new prison in the Scottish Highlands. Working with commercial property firm Colliers, BakerHicks developed the drawings and documents for submission for the new £70m HMP Highland, which will serve the Highlands, Islands and Moray areas, replacing the existing HMP Inverness. The new prison will hold up to 200 people in purpose-designed accommodation units.

The design, developed by BakerHicks, includes a central roundhouse as a focal point for the site, housing visitors, a family centre and staff facilities, and an area where everyone will interact together. The concept stems from the historical use of roundhouses within ancient walled communities or fortresses.

Visit www.baker-hicks.com

Wavin widens soil and waste range

Wavin has further enhanced its commercial soil and waste offering with the launch of its new HDPE pipes and fittings range. The HDPE system is manufactured from a high-density polyethylene that offers enhanced toughness and durability. It also has extraordinary chemical and impact resistance, making it ideal for use in properties, such as hospitals and laboratories.

To assist engineers and contractors in planning projects with BIM, Wavin has created intelligent Revit families for the Wavin HDPE range to ensure designing and specifying above ground drainage systems is easier. Wavin claims to be the only plastic piping systems manufacturer to provide content packages that allow users to build a fully accurate representation of piping system installations. This includes automatic routing preferences, a fully integrated bill of materials and high levels of detail and accuracy every time.

Visit www.wavin.co.uk/soil-and-waste

Thermal energy storage (TES)

Phase change materials (PCMs) store and release thermal energy during the process of melting and freezing, and the latest range of PCM solutions between -100°C and +885°C offer new opportunities.

The excess capacity of existing +7°C water chillers can be stored in +10°C PCM containers overnight, using lower ambient and lower electricity costs. This cheaper stored energy tops up the day peak loads saving considerable running costs.

Email info@pcmproducts.net or visit www.pcmproducts.net

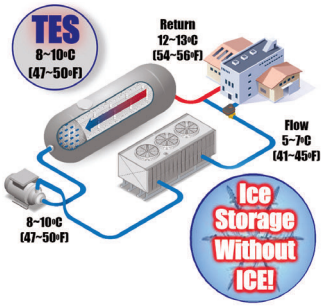

Luceco lights The Pines Special School, Birmingham

Luceco has supplied a complete LED lighting solution for new buildings at The Pines Special School in Birmingham. The primary school educates pupils with communication issues, providing the foundations for future learning.

Facility and maintenance contractor Air Cool Engineering Midlands was responsible for the luminaire installation at The Pines, using square and circular LuxPanels as well as Academy luminaires. Fixed output and dimmable LuxPanels were used in classrooms offering up to 50,000 hours of energy-saving, maintenance-free life. Circular LuxPanels were used in corridors, with IP65 versions fitted in cloakrooms and WCs.

Academy is designed to be a replacement for linear fluorescent fittings, particularly in classrooms, offices and circulation areas. The Academy luminaires installed were fitted with an integral microwave sensor to further reduce energy consumption. With the corridor function selected, the sensor adjusts the light level to 10% of the normal level when space is unoccupied.

Call 07890 320 152 or email Zoe.nh@luceco.com

Going up – new modular boiler gives 1MW from 1m²

Boiler manufacturer and hot water specialist Hamworthy Heating introduces its newest modular boiler: the Upton. With 1MW output from under 1m² of floor space, it's one of the most compact in its class.

The 6-bar rated floor-standing condensing boiler range is available in 18 models with outputs ranging from 100 to 1,050kW. A modulation of 5:1 per module allows closer control of the output, saving on fuel bills and reducing emissions. The vertically stackable design of the modules allows flexible options where space is limited.

Call 01202 662 516 or email pr@hamworthy-heating.com

Alpha welcomes new director of customer service and relations

Richard Geldard joins Alpha Heating Innovation as the new director of customer service and relations, bringing with him extensive knowledge and a genuine passion for helping others. With many years of experience behind him, Geldard's primary focus is on supporting his team to deliver a level of service that not only builds confidence among homeowners and installers, but also sets Alpha apart, ultimately encouraging loyalty to the brand.

Visit www.alpha-innovation.co.uk

Mikrofill in the Place

The Place is a creative powerhouse for dance development that leads the way in dance training, creation and performance.

With the building's existing heating plant beyond economical repair, the decision was made to update the LTHW and HWS equipment during the summer of 2013.

Six Ethos 130kW condensing boilers, with stainless steel heat exchangers, were installed in a basement plantroom by long-standing contractor Claremore Mechanical Services of London. The Ethos boilers provide a total modulation of 60 > 1 (780 > 13kW) and NO_x levels of 33mg/kw. A Mikrovent 750 low-loss header and air/dirt separator intercepts particles down to 5 microns on the existing primary circuit.

The HWS demand was covered by the installation of two Extreme 500L loading cylinders, each capable of producing in excess of 2,570L/hr at 60°C. The new mechanical plant was specified by building services consultant Peter Flower Design of Wellingborough.

Call 03452 606 020 or visit www.mikrofill.com

ATAG Commercial appoints new area sales manager

ATAG Commercial has appointed Nick Underwood as area sales manager for the South of England. This field-based role sees Underwood looking to increase growth and awareness of the ATAG Commercial brand throughout the South of England, as well as drive sales through distribution by working with merchants, contractors and specifiers. He will also be managing the company's growing pool of installers in the area. Underwood has more than 15 years' experience in the industry, having previously worked for Polypipe.

Visit www.atagcommercial.co.uk

New Babcock Wanson high specification steam boilers at an 'off the shelf' price and delivery

The new Premium range is based around Babcock Wanson's NBWB and BWD fire tube boilers that use the firm's latest generation of burners for exceptional quality and performance. Natural gas-fired fully modulating burners are fitted to the majority of the range, covering outputs from 250 to 6,000 kg/h with a 12-15 bar(g) design pressure. Premium range boilers are aimed at the steam user who wants fully automated control.

Call 020 8953 7111, email info@babcock-wanson.co.uk or visit www.babcock-wanson.co.uk

Elco takes to the London skyline for special event

Elco Heating Solutions has taken building services engineers to the 39th and 40th floors of The Gherkin as part of a special 'Insights' event to give a unique insight into the latest advances in boiler technology, including the firm's new Trigon XL floor-standing commercial unit, available in seven models with outputs from 150-570kW.

Guests were given a demonstration of the Trigon XL's modular concept – engineers dismantled a boiler into its component parts, took them up a flight of stairs and reassembled them – all within an hour.

Visit www.elco.co.uk

DIRECTORY Your guide to building services suppliers

Tel: 0207 880 7633 Email: greg.lee@redactive.co.uk

Air Handling

Air Conditioning

Air Conditioning

Building Performance

Energy Efficiency

YEN London celebrated 10 years with a boat cruise in July

Bright young things

CIBSE YEN in London recently celebrated its 10th anniversary. Committee chair Alexandra Logan explains how the group supports its members

The Young Engineers Network (YEN) consists of regional centres that offer a forum and support network for young engineers within CIBSE. They offer a mix of technical seminars and site visits, plus social and networking events.

To celebrate 10 years of the CIBSE YEN in London, more than 100 young engineers – and CIBSE President Peter Y Wong – took part in a boat cruise on the River Thames last month.

This month, the region will hold an inter-professional networking event, at Forge, in London, challenging attendees to a game of 'networking bingo'. The aim of the game is to encourage young members to learn about other professions and meet new peers with experience in delivering some of London's most iconic projects.

Organisations taking part include: the Institution of Fire Engineers (IFE), the Institute of Mechanical Engineers (IMechE) and the Landscape Institute (LI).

Q What have been the highlights of CIBSE YEN?

A A recent highlight was the 10-year anniversary event held in July. It was great to celebrate this milestone with past and current committee members, YEN supporters and many young engineers.

Another was hosting the annual YEN national ball in London last October. More than 130 young engineers from across the country attended the masquerade ball.

Q How do you interact with other YEN groups?

A Twice a year, the chairs and vice-chairs from each YEN centre meet in person for a conference. It's a great way of meeting each other and learning about what other centres are doing. Regular teleconference calls are also held throughout the year.

We are lucky to have David Mather on our committee. He is also the YEN chair – a link between the CIBSE council and all the YEN regional centres.

Q Do you mix with other professions?

A This month, we will be holding our third inter-professional networking event. It is a joint venture, with several other young member groups, including RIBA, the Institute of Acoustics and the Institute of Structural Engineers. The events are a great way of practising networking skills and learning about what other young professionals do in an informal environment.

Q&A

Q What are the biggest issues faced by members?

A Support for young engineers starting out in the industry is very important. It's a big learning curve in the first couple of years in the industry, and young engineers can be overwhelmed or reluctant to ask too many questions. We try to offer a relaxed and informal atmosphere so people are more willing to ask questions or seek advice.

Q How often do you meet?

A This year we have held regular events every month since March. These have included a pub quiz, our CPD 'grub and pub' events on mechanical and electrical topics, and a site visit to Centre Point.

As a committee, we hold meetings every couple of months. If anyone has event ideas, or would like to join our committee, please email **cibseyenlondon@gmail.com**

Q Do your members find it expensive to live and work in London?

A Yes they do – especially those just entering the industry. For most, it's a sacrifice they are willing to make to work on great projects and live in a bustling dynamic city.

A few are moving further out and commuting into London to be able to have a chance of getting on the property ladder. Unfortunately, increasing rent and house prices will likely have a negative effect on the number of graduates applying for jobs in London.

Q How do you encourage diversity in the group?

A Many of our members come from outside of the UK and have a variety of backgrounds. Half of our committee are female, which is much higher than the industry average. We try to make events as inclusive as possible and are careful to select social events that will appeal to most people.

Q What advice would you give to someone starting out in building services?

A Expect a learning curve and do not be put off by lots of acronyms. Be involved in different types of projects and try to go on site visits and to meetings. Don't be afraid to ask questions – everyone was new to the industry at some point.

ALEXANDRA LOGAN is a senior engineer at Cundall, and chair of the CIBSE YEN London committee

EVENTS

HIGHLIGHT

Simone Pagani will speak at the Daylight Group event, 20 September

INTERNATIONAL AND NATIONAL EVENTS/ CONFERENCES

Inter-professional networking event
23 August, London
A relaxed cross-discipline networking event encouraging communication across all areas of the building industry. Attendees will be from CIBSE, Royal Institute of British Architects (RIBA), Forum for Tomorrow (FFT), Institution of Fire Engineers (IFE), Institute of Mechanical Engineers (IMechE), Institute of Structural Engineers (IStructE), and Landscape Institute (LI).
www.cibse.org/events

CPD TRAINING

For details, visit **www.cibse.org/training** or call **020 8772 3640**

Mechanical services explained
12-14 September, London

Energy efficiency building regulations: Part L
15 September, London

Building services overview
20 September, London

Code of practice for fire BS999
19 September, London

Sanitary and rainwater design
20 September, London

Earthing and bonding systems
21 September, London

Low and zero carbon energy technologies
22 September, London

Gas safety regulations (designing for compliance)
26 September, London

Introduction to ground and water source heat pump schemes. Day 1 (CP2)
27 September, London

Implementing to ground and water source heat pump schemes. Day 2 (CP2)
28 September, London

Power systems harmonics
29 September, London

ENERGY ASSESSOR TRAINING

For more information visit www.cibse.org/training or call 020 8772 3616

LCC building design and EPC
1-2 August, London

LCC building design and EPC
18-19 September, London

Air conditioning inspection
19 September, Manchester

LCC building operations and DEC
26-28 September, London

Heat networks code of practice
27-28 September, London

CIBSE GROUPS, SOCIETIES AND REGIONS

For more information about these events visit: **www.cibse.org/events**

Northern: Golf event
10 August, Newtownards

Scotland: Gold championship
25 August, Rowallan Golf Club

West Midlands: Guest pass to Loton Park speed hill climb
26 August, Loton Park

West Midlands: British Touring Car Championship (BTCC)
27 August, Rockingham

ILEVE: Technical day and AGM
6 September, London
ILEVE technical day on ventilation extract and stack arrangements for local exhaust ventilation systems. Technical day will also include the 2017 ILEVE AGM.

Northern Ireland: Golf event
7 September, Rockmount Golf Club

Young Energy Performance Group: Summer Games
8 August, Aldgate Tower, London
An evening social, hosted by Aecom, with puzzles, and challenges. An opportunity to network and meet new people.

1st International Museum Lighting Conference
11 September, London
The conference aims to be a dialogue platform between academics and museum lighting professionals on the current research in the field.

Yorkshire: Energy Works visit
11 September, Hull
Visit to the new Energy Works Centre, in Hull – a facility using a combination of innovative renewable technologies to achieve an efficient mix of recycling and energy conversion processes. With speakers Chris Wilcock, senior project manager, and Simon Hornby, MSA project manager.

Scotland: Power quality problems: causes, effects and solutions
18 September, Glasgow
Seminar explaining how the alternations to improve energy efficiency can introduce power quality problems, uncovering the causes, effects and solutions and how to avoid a resulting site investigation by electicity suppliers.

Daylight Group: Daylight within planning guidance in London
20 September, London
Debate on how daylight planning guidance should be applied following the recent call for density within the Housing White Paper and the March 2016 Housing SPG. Panel members include: Simone Pagani, senior partner daylight and solar design, GIA; John Walker, director of development planning, City of Westminster Council; Andrew Thompson, directory of neighbourly matters, Savills.

SoPHE: Design and application of HIU systems
20 September, Manchester
Presentation by Chris Doherty of Oventrop.

Home Counties North East: Membership briefing session
26 September, Cornhill
Briefing with focus on Associate and Member grade applications, and registration with the Engineering Council.

Build2Perform Live

21-22 November, Olympia, London

Coming to London's Olympia on 21-22 November, Build2Perform Live is a free two-day interactive event dedicated to helping built environment professionals and the wider supply chain improve efficiency and save money through effective building services.

Evolving from CIBSE's Building Performance Conference and Exhibition, this new event offers more interactive features and multiple seminar streams encompassing an entire floor at London's Olympia Exhibition Centre.

As well as sessions on heritage buildings, wellbeing and digital engineering, there will be a Young Engineers Network (YEN) stream focusing on creating better engagement with clients. Chaired by David Mather, of Cudd Bentley Consulting, the sessions will explore how building performance affects our future, and why clients are satisfied with doing the bare minimum to meet statutory requirements. Speakers include Madeleine Velupillai, of Land Securities, and John Bradshaw, of the Co-operative Group. Another highlight will be a YEN Build2Perform competition on getting buy-in from clients on building performance.

■ Visit **www.cibse.org/b2plive** for details.

Update on legislation session in 2016

CIBSE LIVE BUILD2 PERFORM

21-22 November 2017
Olympia, London

SEMINAR PROGRAMME HIGHLIGHTS

Wellbeing

Overheating, Biophillic office, Circadian rhythms, POE, WELL Building Standard, Importance of FM & HR

Digital Engineering

Automated concept design, Employer requirements, Level 2 BIM workflow, Modelling building physics, Digital FM, Commissioning data, Build offsite

Energy

Options at the concept stage, Review of the market, Reducing costs & demand, Microgeneration, Energy metering

COMING SOON

Headline theatre
Exhibitor CPD theatre

FREE to attend Register today at cibse.org/b2plive

Supporters

BPF BRITISH PROPERTY FEDERATION

ECA

IHEEM

ICOM Energy Association

IOR.org.uk REFRIGERATION AIR CONDITIONING HEAT PUMPS

Media Partner

CIBSE JOURNAL

Parallel Support & Learning

@CIBSE #Build2Perform

soundcloud.com/build2perform

cibseblog.co.uk

CIBSE CPD

For **exhibition opportunities** contact Steve today on 01892 518877 or email stevewebb@stepex.com.

CMR in complete control

CMR Controls manufactures low air pressure and air volume measurement sensors and control systems for standard air conditioning, clean rooms, sterile laboratories, containment facilities, and fume cupboard extract systems.

DPC CONTROLLER

Fast and accurate controls to drive high speed dampers or invertors. Full PID stand alone controls with BMS interface.

DPM PRESSURE SENSOR

Panel Mount Pressure or Velocity Transducers with remote alarms, analogue and digital interfaces. Traceable calibration certificates supplied as standard.

CAV AND VAV DAMPERS

Accurate air flow measurement with the unique CMR Venturi built into the airtight shut-off damper to control room pressure or constant volume.

Metal Damper

AIR MANAGEMENT SYSTEM

A complete turn-key system to control room pressure to +/-1Pa. Fume cupboard face velocity to 0.5m/s at high speed and provide constant air changes into the labo - clean room.

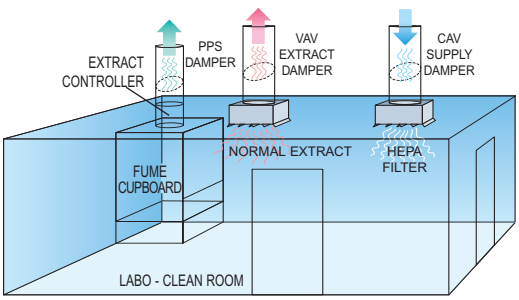

PPS EXTRACT DAMPER

Poly-propelene control and shut off valve incorporating the CMR Venturi Nozzle. This is essential when dealing with corrosive extract air especially from fume cupboard systems.

PPS Damper

PRECISION COMPONENTS FOR VENTILATION AND PROCESS CONTROL

CMR CONTROLS

A Division of C. M. RICHTER (EUROPE) LTD

22 Repton Court, Repton Close,
Basildon, Essex SS13 1LN. GB
Website: http://www.cmr.co.uk

Tel: +44 (0)1268 287222
Fax: +44 (0)1268 287099
E-mail: sales@cmr.co.uk

CMR®